Barudan

COMPUTER MONOGRAM MACHINE

MODEL BEAT 802

(U.S.A)

PARTS LIST

BARUDAN CO., LTD.

ADDRESS 20-TSUKAGOSHI. JOSUIJI
ICHINOMIYA-CITY· AICHI-PREF·
JAPAN
TEL. <0586>77-0404
TELEX 4573268 BARUNA J
CABLE BARUNA ICHINOMIYA

BEAT－802 (U.S.A)
PARTS LIST

INDEX

ITEM No.	Page No.
Machine layout	1
①Fram and Table assy	2
②Sewing head	4
③Needle bar ▪ Take up lever mechanism	6
④Thread guide mechanism	8
⑤Jamp mechanism	10
⑥Color change mechanism	12
⑦Option	14
⑧Conecting mechanism	16
⑨Drive mechanism	18
⑩Pantograph drive mechanism Ⅰ	20
⑪Pantograph drive mechanism (H) Ⅱ	22
⑫Pantograph drive mechanism (V) Ⅲ	24
⑬Contorol system	26
⑭Thread cutting mechanism Ⅰ	28
⑮Thread cutting mechanism Ⅱ	30
⑯Thread cutting mechanism Ⅲ	32

Machine layout (PROFIT-802)

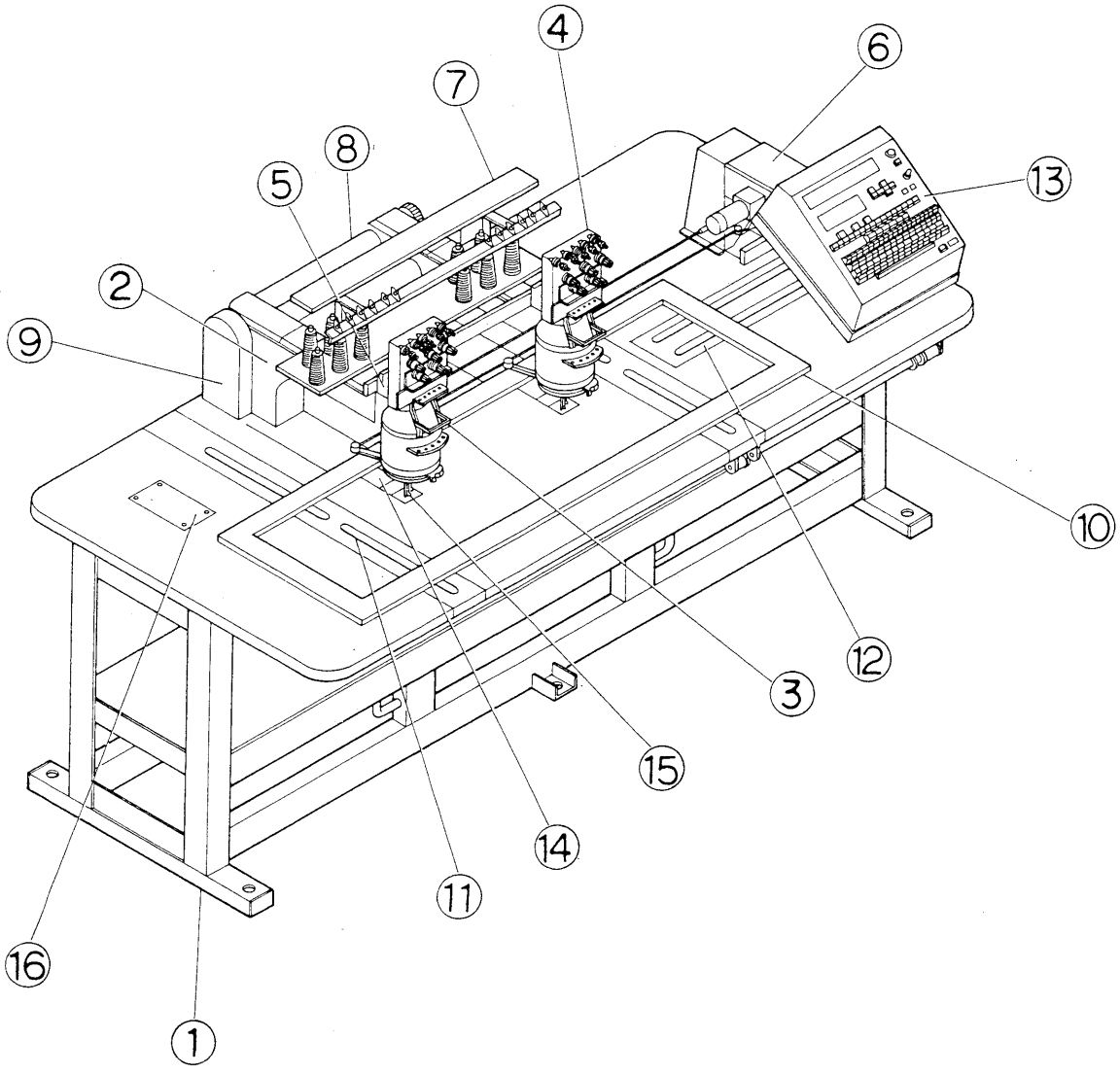

① Frame and Table assy

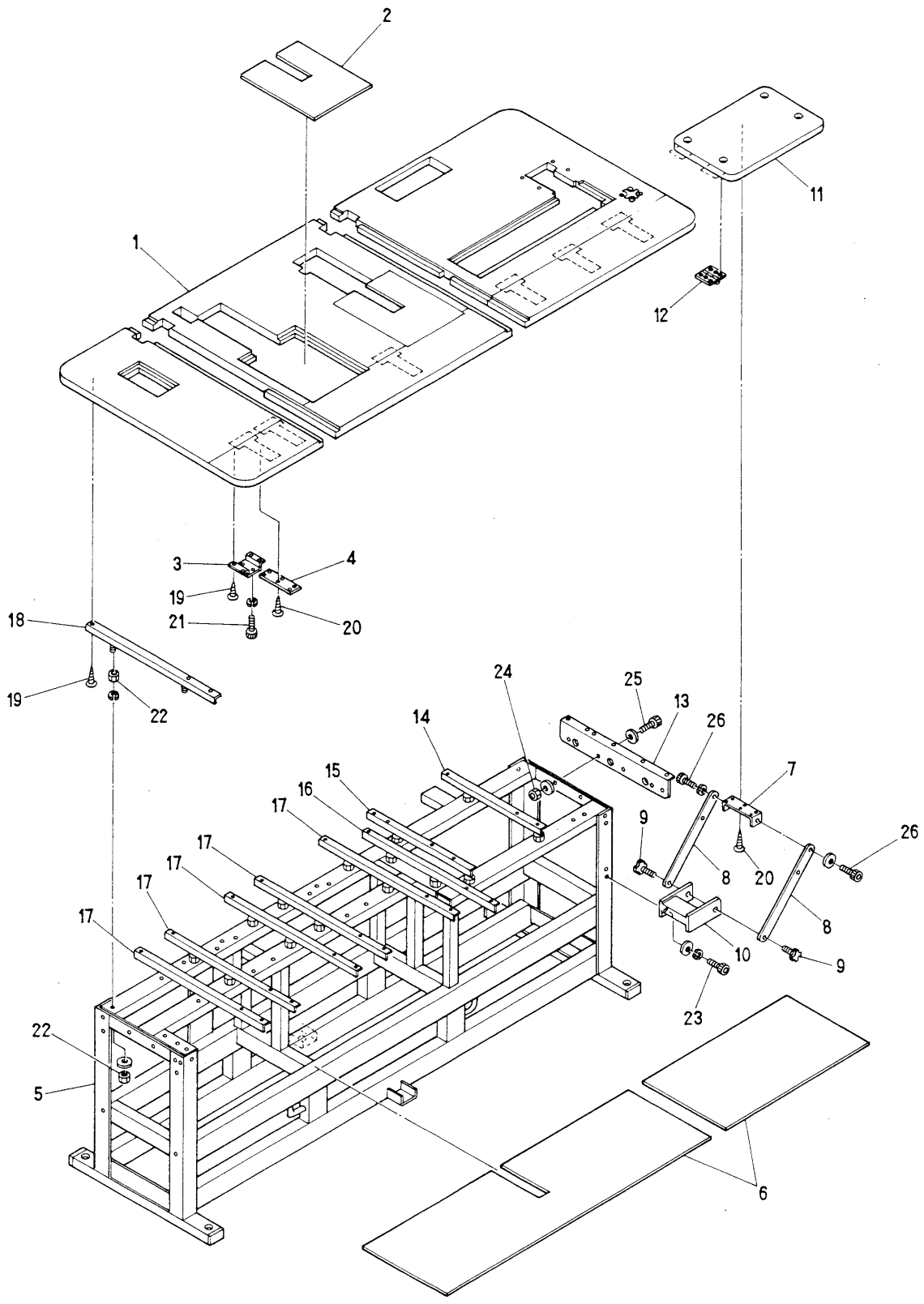

① Frame and Table assy

ITEM	PART No.	LIST No.	DESCRIPTION	Q'TY	REMARK
1	15G2U03	KU151623	Table (Profit-802, 320×450)	1	
2	1266G02	KG120662	Table cover	2	
3	1438A	MA140380	Support table bracket	6	
4	1469A	MA140690	Support table (Big)	6	
5	16G2U02	KU161622	Frame (Profit-802, 320×450)	1	
6	15H7U00	KU151770	Shelf board (Profit-702, 320×450)	1	
7	1474A	MA140740	Stay fixing bracket	1	
8	1478A	MA140780	Stay	2	
9	91208	A9012008	Knob bolt M10 L=20	2	
10	1476A	MA140760	Sub table bracket	1	
11	1475A	MA140750	Sub table	1	
12	1496A00	MA140960	Sub table hinge B-1-4	2	
13	1280U00	KU120800	Table support	1	
14	1284C01	KC120841	Table support (475L)	2	
15	1455U00	KU140550	Table support	1	
16	1457A	MA140570	Table support (650L, AT-106)	3	
17	1453A	MA140530	Table support No.1	2	
18	1458A	MA140580	Table support	1	
19			Screw M5×25		
20			Wood screw M5.1×32		
21			Hex, socket bolt M8×15		
22			Hex, nut 3/8		
23			Hex, socket bolt M8×20		
24	1191C	KC110910	Side cover for frame (R)	1	
25			Hex, socket bolt M6×20		
26			Hex, socket bolt M8×30		
27			Hex, socket bolt M6×8		

(HI)10.200

② Sewing head

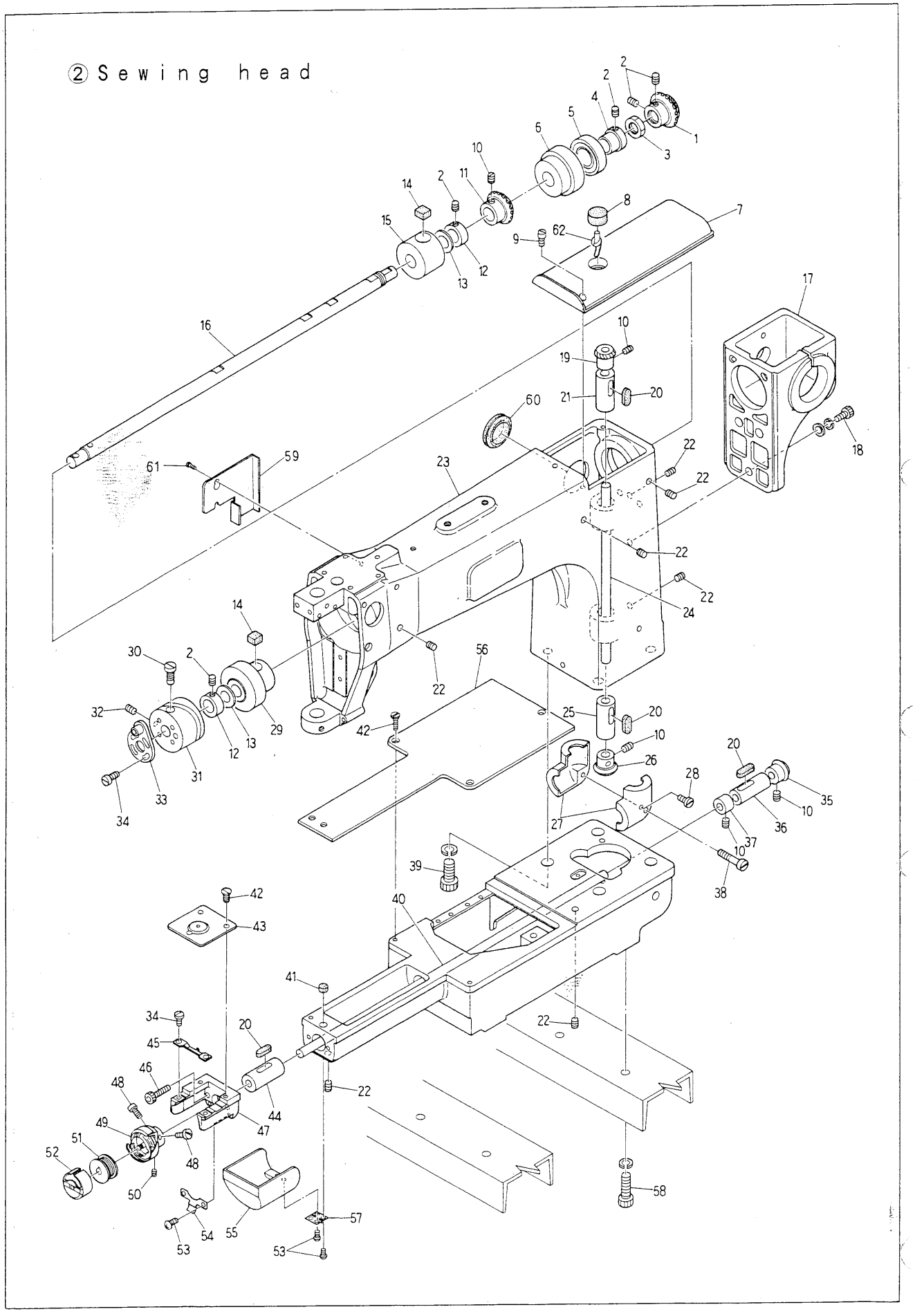

② Sewing head

ITEM	PART No.	LIST No.	DESCRIPTION	Q'TY	REMARK
1	2210L00	KL220100	Top shaft gear	1	
2			Hex. socket set screw M6×6		
3	2211L00	KL220110	Top shaft adjust nut M14	1	
4	2209L00	KL220090	Top shaft bearing collar (Rear)	1	
5	91017	A9010017	Bearing (6004ZZ)	1	
6	2204L00	KL220040	Top sraft bearing case	1	
7	2504L00	KL250040	Arm top cover	1	
8	2215L00	KL220150	Oil felt D	1	
9			Screw M4X10		
10			Screw (SM1/4 40×4)		
11	2213F	KF220130	Bevel gear (Top shaft)	1	
12	2208L00	KL220080	Top shaft collar	2	
13	23D9P00	HP231390	Thrust washer	2	
14	2213L00	KL220130	Oil felt B	2	
15	2203L00	KL220030	Top shaft metal (Middle)	1	
16	2200L00	KL220000	Top shaft	1	
17	2114L00	KL210140	Arm gear case	1	
18			Hex. socket bolt M6×25		
19	2246F	KF220460	Bevel gear (Vertical shaft upper)	1	
20	2214L00	KL220140	Oil felt C	4	
21	2205L00	KL220050	Vertical shaft metal (upper)	1	
22			Hex. socket set screw M6×8		
23	2100L00	KL210000	SRE Assy Head 7		
	2101L00	KL210010	SRE Assy Head 5		
	2100L0T	KL2100 0T	SRE Assy Head 7 (with thread cutter)		
	2101L0T	KL2100 1T	SRE Assy Head 5 (with thread cutter)		
24	2201L00	KL220010	Vertical shaft	1	
25	2206L00	KL220060	Vertical shaft metal (Lower)	1	
26	2247F	KF220470	Bevel gear (Vertical shaft (Lower))	1	
27	2227F	KF220270	Gear cover set	1	
28			Screw (SM15/64 28×24)		
29	2202L00	KL220020	Top shaft metal (Front)	1	
30	2342F	KF230420	Cam set screw	1	
31	2341N00	KN230410	Take up lever cam G	1	
32			Screw (SM15/64 28×10)		
33	2343N00	KN230430	90° Clamping	1	
34	91207	A9012007	Screw	6	
35	2248F	KF220480	Bevel gear (Bottom shaft)	1	
36	2207L00	KL220070	Bottom shaft metal (Rear)	1	
37	2229F	KF220290	Bottom shaft collar	1	
38			Screw (SM9/32 20×38)		
39			Hex. socket bolt M12×35		
40	2221C	KC220210	Bottom shaft	1	
41	2212L00	KL220120	Oil felt A	1	
42	2590F	KF250900	Needle plate set screw (SM11/64 40×7)	2	

② Sewing head

ITEM	PART No.	LIST No.	DESCRIPTION	Q'TY	REMARK
43	2513A01	MA250131	Needle plate	1	
44	2223F	KF220230	Bottom shaft metal (front)	1	
45	2251A	MA220510	Bobbin case fixing plate	1	
46			Hex. socket bolt M5×15		
47	2113L00	KL210130	Needle plate bracket (SRE)	1	(without cutter)
48			Screw (SM11/65 40×5)		
49	2231F	KF220310	Bobbin (HSL-A-M1Q)	1	
	2275F00	KF220750	Bobbin KHS 12-RYNW (Option)	1	
50			Screw (SM11/65 40×4)	1	
51	2241F	KF220410	Bobbin	1	
52	2237F	KF220370	Bobbin case (MK-3)	1	
53			Pan screw M3×6		
54	2548C01	KC250481	Barrel bed cover push spring	1	
55	2547C01	KC250471	Barrel bed cover	1	
56	2191G01	KG210911	Cylinder bed cover	1	
57	91227	A9012027	Butterfly nut (TH-TM-72)	1	
58			Hex. socket bolt M8×20		
59	2505L00	KL250050	Arm side cable cover	1	
60	91463	A9014063	Gromment C-30-SG-36A	1	
61			Binding screw M4×8		
62			Oil core	1	

③ Needle bar · Take up lever mechanism

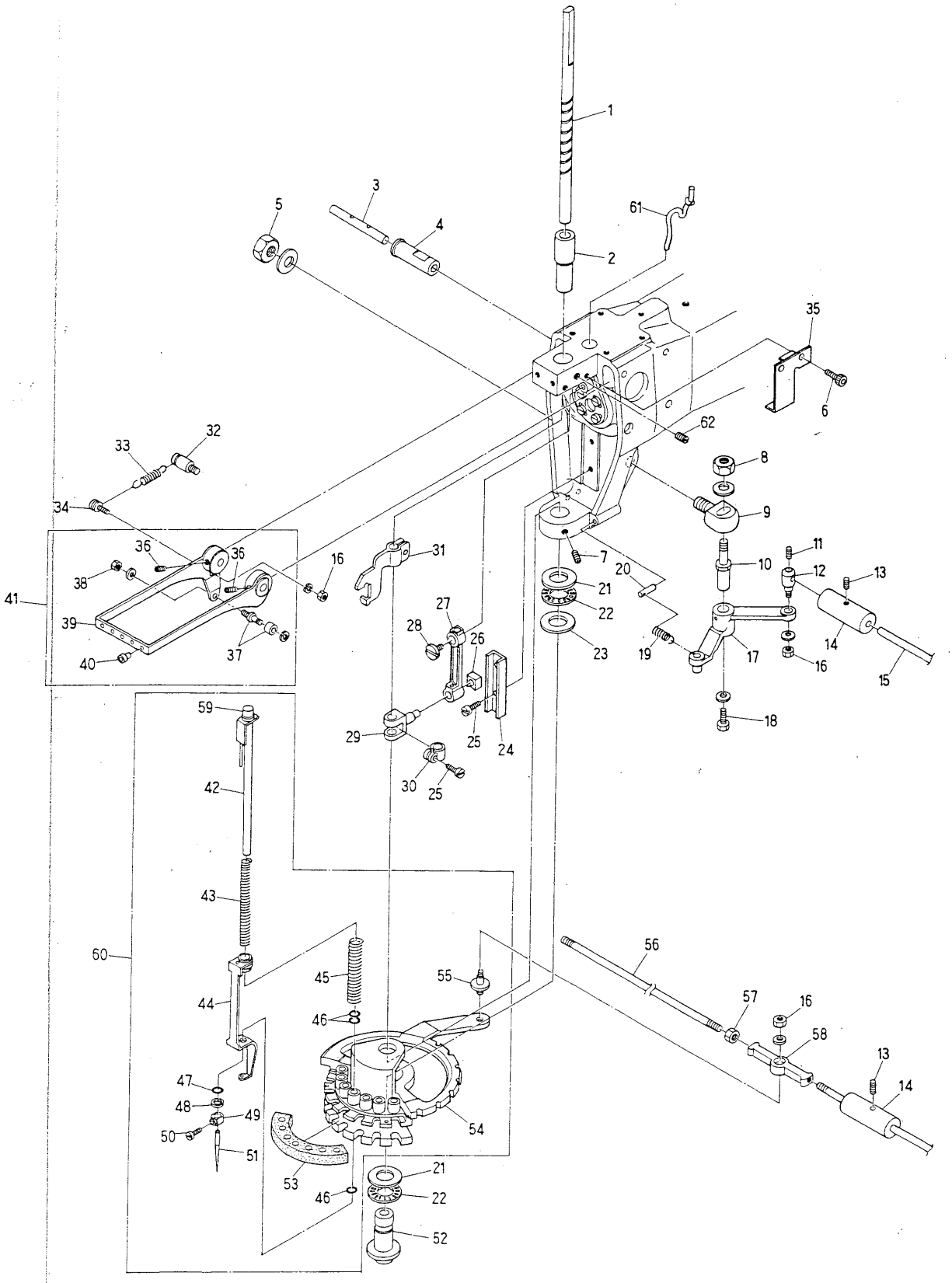

③ Needle bar ▪ Take up lever mechanism

(N=needle Q'ty)

ITEM	PART No.	LIST No.	DESCRIPTION	Q'TY	REMARK
1	2300L00	KL230000	Driving shaft	1	
2	2332F	KF230320	Driver shaft upper metal	1	
3	2351F02	KF230512	Take up lever shaft	1	
4	2352F01	KF230521	Take up lever metal	1	
5			Hex, nut M10		
6			Hex, socket bolt M4×8		
7			Hex, socket set screw (steel globe) M6×0.75×8		
8			Hex, nut M8		
9	2365F	KF230650	Lock lever bracket	1	
10	2363F	KF230630	Lock lever shaft	1	
11			Hex, socket set screw M4×6		
12	2364F	KF230640	Lock connection rod clamp	1	
13			Hex, socket set screw M5×5		
14	3338F01	KF330381	Lock bar hand grip	1	
15	3341C	KC330410	Lock connecting rod (2M)	3	
16			Hex, nut M4		
17	2361G	KG230610	US Lock lever	1	
18			Hex, bolt M5×10		
19	2366F01	KF230661	Lock lever spring	1	
20	2367F	KF230670	Lock lever spring pin	1	
21	91123	A9011023	Thrust bearing (GS1528)	2	
22	91121	A9011021	Thrust bearing (NTB−1528)	2	
23	91122	A9011022	Thrust washer (AS−1528)	1	
24	23D1P00	HP231310	Guide box	1	
25			Screw (SM9/64 40×8)		
26	23D7P00	HP231370	Square ball	1	
27	23D0P01	HP231301	Clank rod	1	
28	2345F	KF230450	90° Clank screw fork	1	
29	23C9P00	HP231290	Needle bar driving	1	
30	2348F	KF230480	Needle shaft clamp	1	
31	2314L00	KL230140	Needle bar driver	1	
32	2302L00	KL230020	Take up lever spring shaft	1	
33	2303L00	KL230030	Take up lever spring	1	
34	2301L00	KL230010	Take up lever spring screw	1	
35	2317L00	KL230170	Oil core bracket	1	
36			Hex, socket set screw M5×6		
37	2350F	KF230500	Take up lever roller assy	1	
38			Hex, nut 7/32		
39	2307L00	KL230070	Take up lever (SRE-7)	1	
	2308L00	KL230080	Take up lever (SRE-5)	1	
40	2358F	KF230580	Ceramic thread guide SRE (7)	N×1	
41	2319L00	KL230190	Take up lever assy SRE (7)	1	
	2320L00	KL230200	Take up lever assy SRE (5)	1	
42	2301F	KF230010	Needle bar assy	N×1	

③ Needle bar ▪ Take up lever mechanism (※ change the PARTS No. by machine type) (N=needle Q'ty)

ITEM	PART No.	LIST No.	DESCRIPTION	Q'TY	REMARK
44	2302G	KG230020	Presser foot	N×1	
45	2321F	KF230210	Needle bar spring	N×1	
46	2392F	KF230920	O-ring (L)	N×3	
47	2391F	KF230910	O-ring (S)	N×1	
48	2393F	KF230930	Specer	N×1	
49	2323F	KF230230	Needle clamp	N×1	
50	2324F	KF230240	Needle clamp screw (SM9/64)	N×1	
51	2325F	KF230250	Needle (DB K5 11)	N×1	
52	2313L00	KL230130	Driver shaft lower metal	1	
53	2311L00	KL230110	Turret plate felt (SRE-7)	1	
	2312L00	KL230120	Turret plate felt (SRE-5)	1	
54	2305L00	KL230050	Turret plate (SRE-US)	1	
55	23D4P00	HP231340	Turret plate joint pin	1	
56	3331C	KC330310380	Turret plate connecting rod L-250	1	※
57			Hex. nut M5		
58	91205	A9012005	Uni ball joint NMBRD4-020N (First head)	1	(First head)
	91203	A9012003	Uni ball joint NMBRD4-020L (Final head)	1	(Final head)
59	2315F	KF230150	Needle bar cap	N×1	
60	2321L00	KL230210	Turret plate assy SRE (7)	1	
	2322L00	KL230220	Turret plate assy SRE (5)	1	
61			Oil core		
62			Set screw (M6×6)		

④ Thread guide mechanism

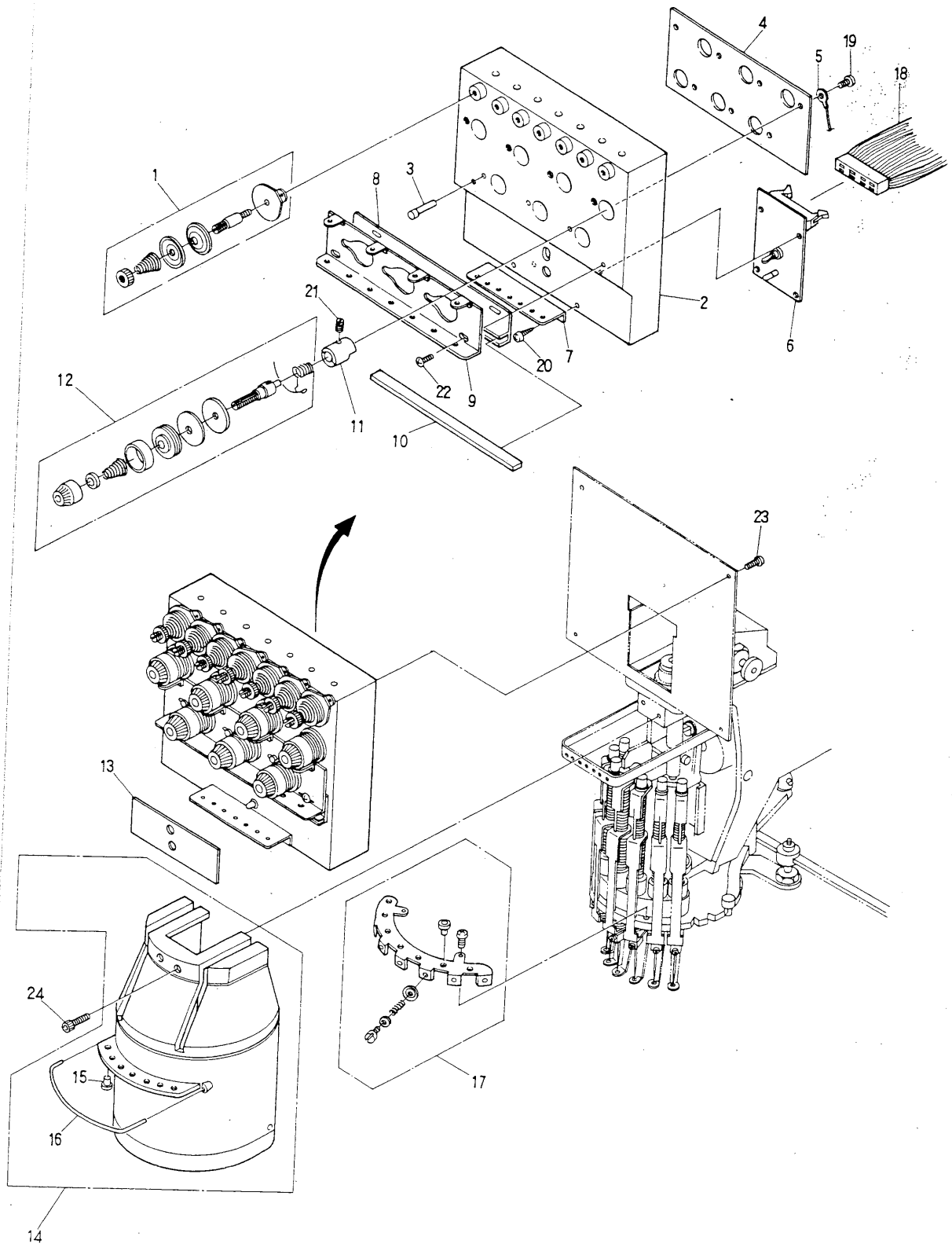

④ Thread guide mechanism

ITEM	PART No.	LIST No.	DESCRIPTION	Q'TY	REMARK
1	24A2G	KG241020	Upper tension unit complete US	5	
2	24B1P00	HP241110	Tension base (7)	1	
3	24B6P00	HP241160	Upper thread detection pin	5	
4	24D7P01	HP241371	Tension earth plate (7)	1	
5	24D9P00	HP241390	Tension earth cable	1	
6	55C0150	EBY00150	3720 Head board	1	
7	24B9P00	HP241190	Second thread guide plate (7)	1	
8	24E5P00	HP241450	Thread guide felt fixing plate (7)	1	
9	24B7P00	HP241170	First thread guide (7)	1	
10	24E7P00	HP241470	Thread guide felt (7)	1	
11	24B5P00	HP241150	Tension base (with screw)	5	
12	24E1P00	HP241410	Dial type tension unit complete	5	
13	24E0P00	HP241400	Tension base label	1	
14	2500L00	KL250010	Sewing head cover (7)	1	
15	2493F01	KF240931	Thread guide φ11 (Alumina)	5	
16	2558P01	HP250581	Sewing head cover thread guide	1	
17	2505P00	HP250050	Thread end trap assy (UF)	1	
18	5142U00	KU510420	Flat cable AT-702 (S-4000×1100×2)	1	
19			Pan screw M3×4		
20			Tapping screw M3.5×8		
21			Set screw (SM11/64 40×5.5)		
22			Truss screw M4×6		
23			Pan screw M4×10		
24			Hex, socket bolt M5×10		

(HI)10.200

⑤ Jamp mechanism

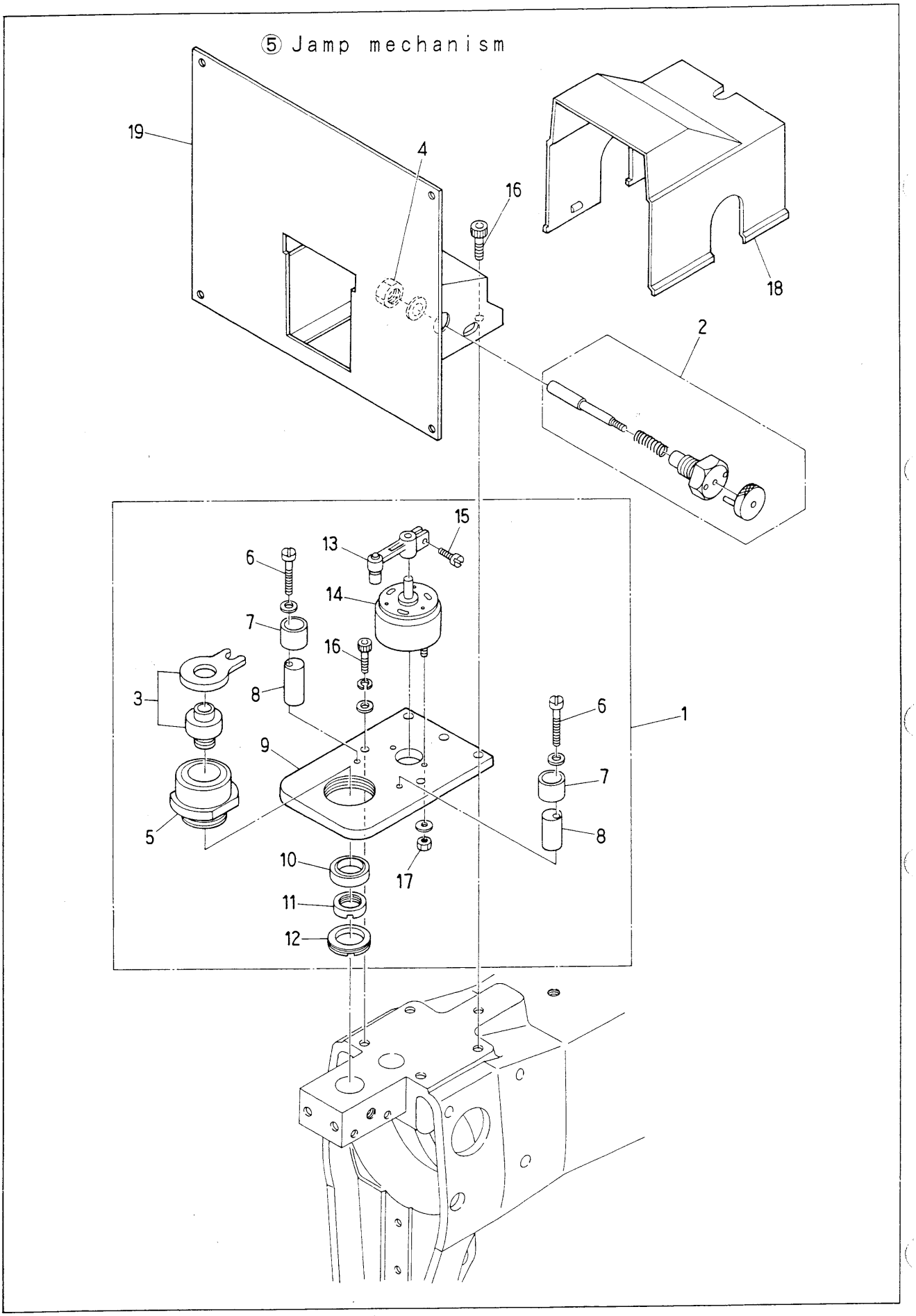

⑤ Jamp mechanism

ITEM	PART No.	LIST No.	DESCRIPTION	Q'TY	REMARK
1	2402P00	HP240020	Jamping set (BESRH)	1	
2	24C3F	KF240030	Canceling pin assy	1	
3	2420F00	KF240200	Rotor lever set	1	
4			Hex, nut M12		
5	2445F	KF240450	Rotor case	1	
6			Screw M4×25		
7	2449F	KF240490	Stopper eccentrie cover	2	
8	2448F	KF240480	Stopper eccentrie	2	
9	23D3P00	HP231330	Solenoid base	1	
10	91009	A9010009	Bearing (SSA-2015H)	1	
11	2447F	KF240470	Ring nut (S)	1	
12	2446F	KF240460	Ring nut (L)	1	
13	2442F	KF240420	Rotor Lever	1	
14	2461F	KF240610	Rotary solenoid (3ER25-35)	1	
15			Screw (SM9/64 40×8)		
16			Hex, socket belt M5×15		
17			Hex, nut M3		
18	24C1P00	HP241210	Tension cable cover	1	
19	24B3P00	HP241130	Tension base (5)	1	
	24B4P00	HP241140	Tension base (7)	1	

⑥ Color change mechanism

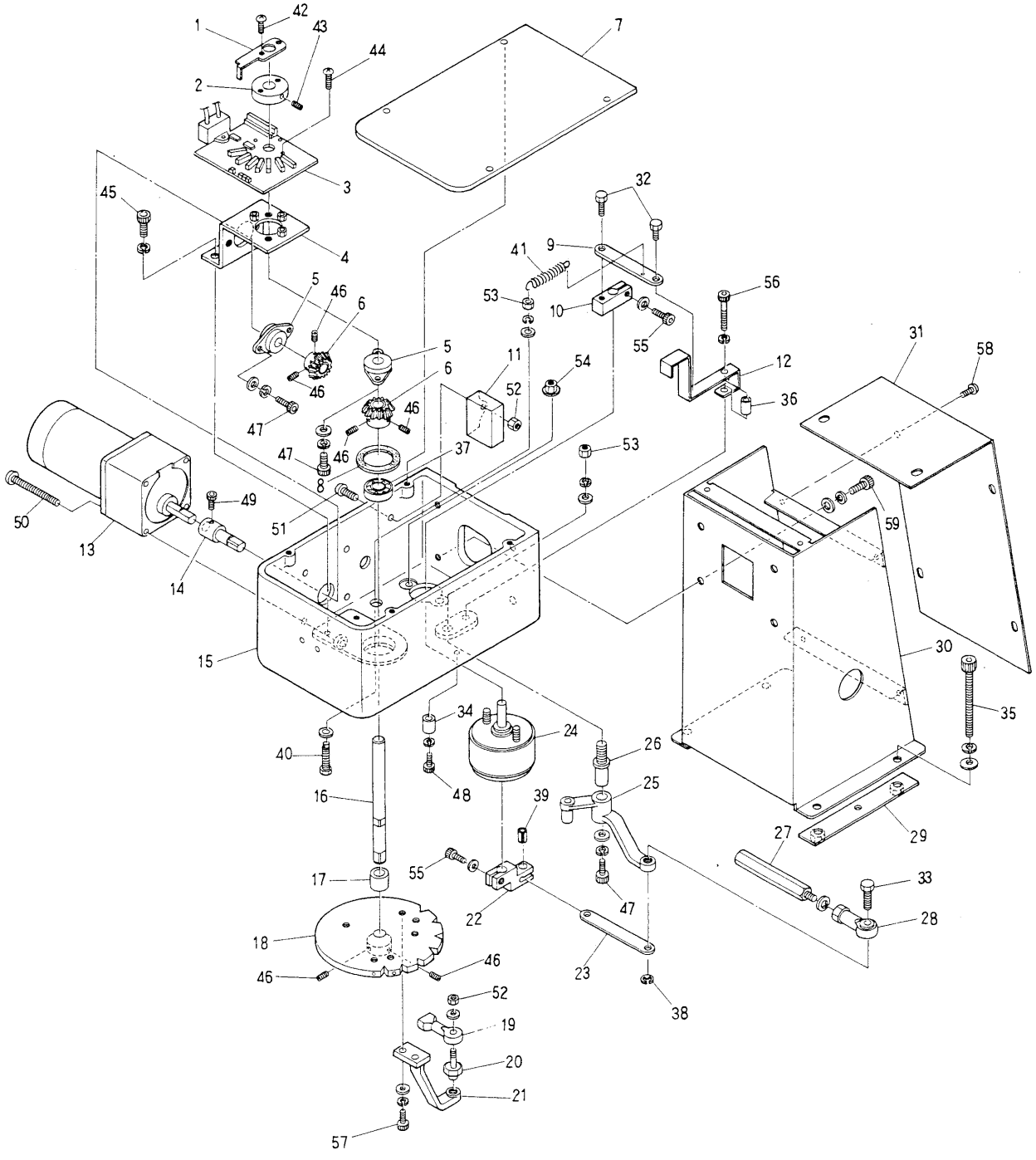

⑥ Color change mechanism

ITEM	PART No.	LIST No.	DESCRIPTION	Q'TY	REMARK
1	3328H01	HH330281	Detection plate	1	
2	3317C	KC330170	Plate collar	1	
3	55T0100	EBN00660	SDU color change board (7020-4100)	1	
4	33J1U00	KU331910	Turret drive base	1	
5	91149	A9011049	FYH, oiless pyro 80 (80FL-10)	2	
6	3362H	HH330620	IM25T straight miter bevel	2	
7	33H4U00	KU331740	Lock detection plate (Drive plate)	1	
8	912F0	A9012150	Thrust washer (TW1530)	1	
9	33J4P00	HP331940	Lock detacive plate (Drive plate)	1	
10	33J6P00	HP331690	Lock detacive plate (Drive lever)	1	
11			Condenser (3381H accessory)	1	
12	33J3U00	KU331930	Lock detacive plate	1	
13	3381H	HH330810	Geard motor RM-F6A5PC3-AS-180	1	
14	33F7P00	HP331570	Geard motor shaft	1	
15	33J0U00	KU331900	Turret control box	1	
16	33F8P00	HP331580	Needle turning shaft	1	
17	33F9P00	HP331590	Turn table adjusting collar	1	
18	3315G	KG330150	US Control turning plate	1	
19	91201	A9012001	NMB RD4 020R	1	
20	33G6P00	HP331660	Turret plate joint pin	1	
21	33F2U00	HP331520	Turret turn table lever	1	
22	33F5P00	HP331550	Lock solenoid lever	1	
23	33G0P00	HP331600	Lock lever link	1	
24	95611	A9056011	Rotary solenoid 6SR25-27X3,4,9	1	
25	33F3P01	HP331531	Turret lock lever	1	
26	2363F	KF230630	Lock lever shaft	1	
27	3351C	KC330510	Hex, connecting bar (L)	1	
28	91202	A9012002	NMB PR-6	1	
29	33H3U00	KU331730	Turret box stay fixing plate	2	
30	33H1U01	KU331711	Turret box fixing stay	1	
31	33H2U01	KU331721	Turret box fixing stay cover	1	
32	740F3Q0	HQ741F30	Bell crank bolt	2	
33	33F6P00	HP331560	Lock lever pin	1	
34	3367H	HH330670	Stopper eccentric	1	
35	2362F	KF230620	Lock lever roller	1	
36	33J5P00	HP331950	Lock detection plate (Turret shaft)	1	
37	91001	A9010001	Bearing (6000zz)	1	
38	91255	A9012055	E-ring $\phi 4$	1	
39	912E3	A9012143	Spring $\phi 6$ L=12	1	
40	33H5U00	KU331750	Lock sub spring pin	1	
41	33H6U00	KU331760	Lock sub spring	1	
42			Screw M3×6		
43			Hex, socket set screw M5×8		
44			Screw M3×4		

ITEM	PART No.	LIST No.	DESCRIPTION	Q'TY	REMARK
46			Hex, socket set screw M5×6		
47			Hex, socket bolt M5×10		
48			Hex, socket bolt M4×20		
49			Hex, socket bolt M4×6		
50			Pan screw M4×60		
51			Screw M4×15		
52			Hex, nut M4		
53			Hex, nut M8		
54			Hex, nut M5		
55			Hex, socket bolt M5×12		
56			Hex, socket bolt M4×30		
57			Hex, socket bolt M5×12		
58			Screw M4×8		
59			Hex, socket bolt M6×15		
60			Hex, socket bolt M6×50		

(HI)10.200

⑦ Option

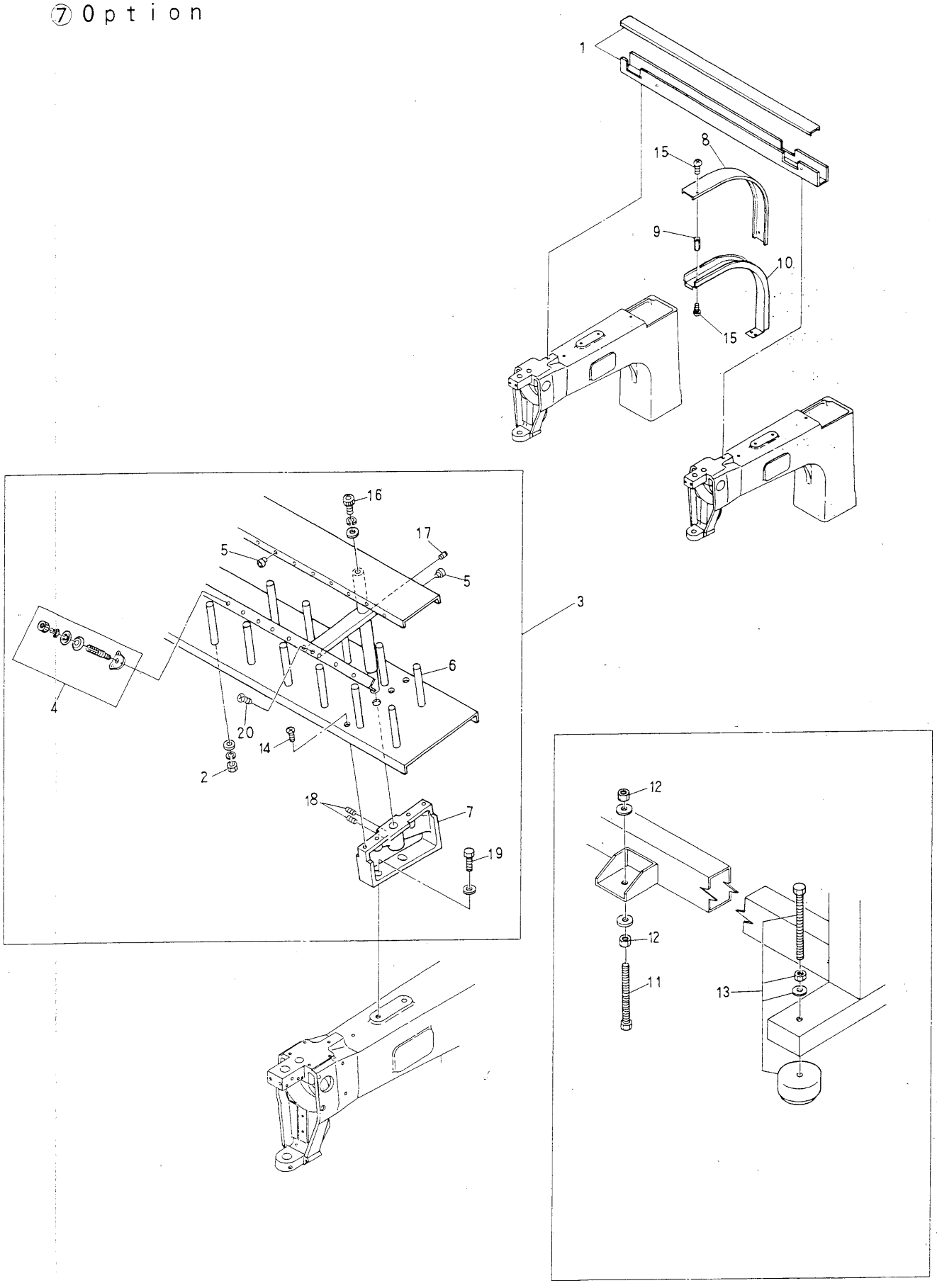

⑦ Option

ITEM	PART No.	LIST No.	DESCRIPTION	Q'TY	REMARK
1	5176C	KU51076102520	Cable duct ASSY AT-802 P520		
	5187N00	KU51087102520	Thread cutting cable duct ASSY AT-802 P520		
2			Hex. nut M5		
3	71B7G00	KG711170	Thread stand (BEAT-802,US) (7)		
4	24A3G01	KG241031	Second thread stand tention unit complete US		
5	2490F	KF240900	Thread guide ceramic (Thread stand)		
6	7128F	KF710280	Thread stand bar		
7	7179P00	HP710790	Thread stand base	(R1 L1	
8	5168T01	MT510681	Cable duct No.4 cover	1	
9	5179T01	MT510791	Nut for cable duct	2	
10	5167T01	MT510671	Cable duct No.4	1	
11			Hex. bolt M16×130	4	
12			Hex. nut M16		
13	1290H	HH120900	Mount set 140×70	4	
14			Flush screw M4×12		
15			Truss screw M4×6		
16			Hex. socket bolt M6×15		
17			Hex. socket set screw M6×8		
18			Hex. socket set screw M5×8		
19			Hex. bolt M8×20		
20			Flush screw M5×6		

⑧ Conecting mechanism

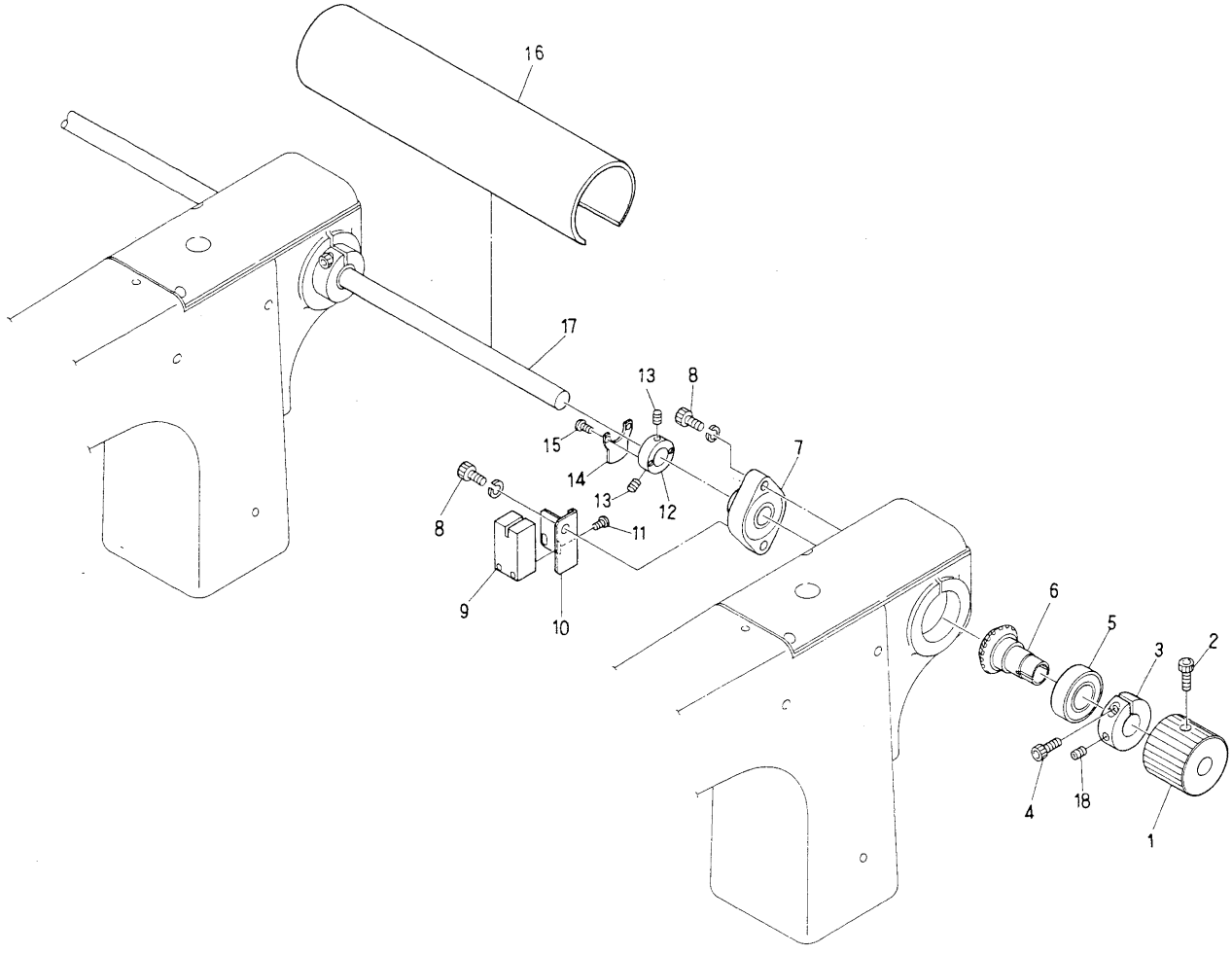

⑧ Conecting mechanism

ITEM	PART No.	LIST No.	DESCRIPTION	Q'TY	REMARK
1	3259C	KC320590	Hand pulley	1	
2			Hex, socket bolt M6×12		
3	48J8H	HH481980	Split clamp φ19	1	
4			Hex, socket bolt M6×22		
5			Bearing 6004ZZ		
6	3200L00	KL320000	Connecting gear (Spiral M1.5-25L)	1	
7	32B4P00	HP321140	Top shaft connecting shaft unit (BFLN02A)	1	
8			Hex, socket bolt M6×30		
9	5435F	KF540350	TLPP-24	1	
10	3116U01	KU310160	Main shaft origin point sensor bracket	1	
11			Tapping screw M4×10		
12	3130W00	WW310300	Main shaft origin point sonsorium plate collar φ15	1	
13			Hex, socket set screw M5×8		
14	3131W00	WW310310	Main shaft origin point sonsorium plate	1	
15			Truss screw M3×8		
16	3A00010	IPU02520	Connecting shaft cover assy	1	
17	31R6U01	KU312761	Driving shaft (Profit-802, BEAT-802)	1	
18			Hex, socket set screw M6×10		

⑨ Drive mechanism

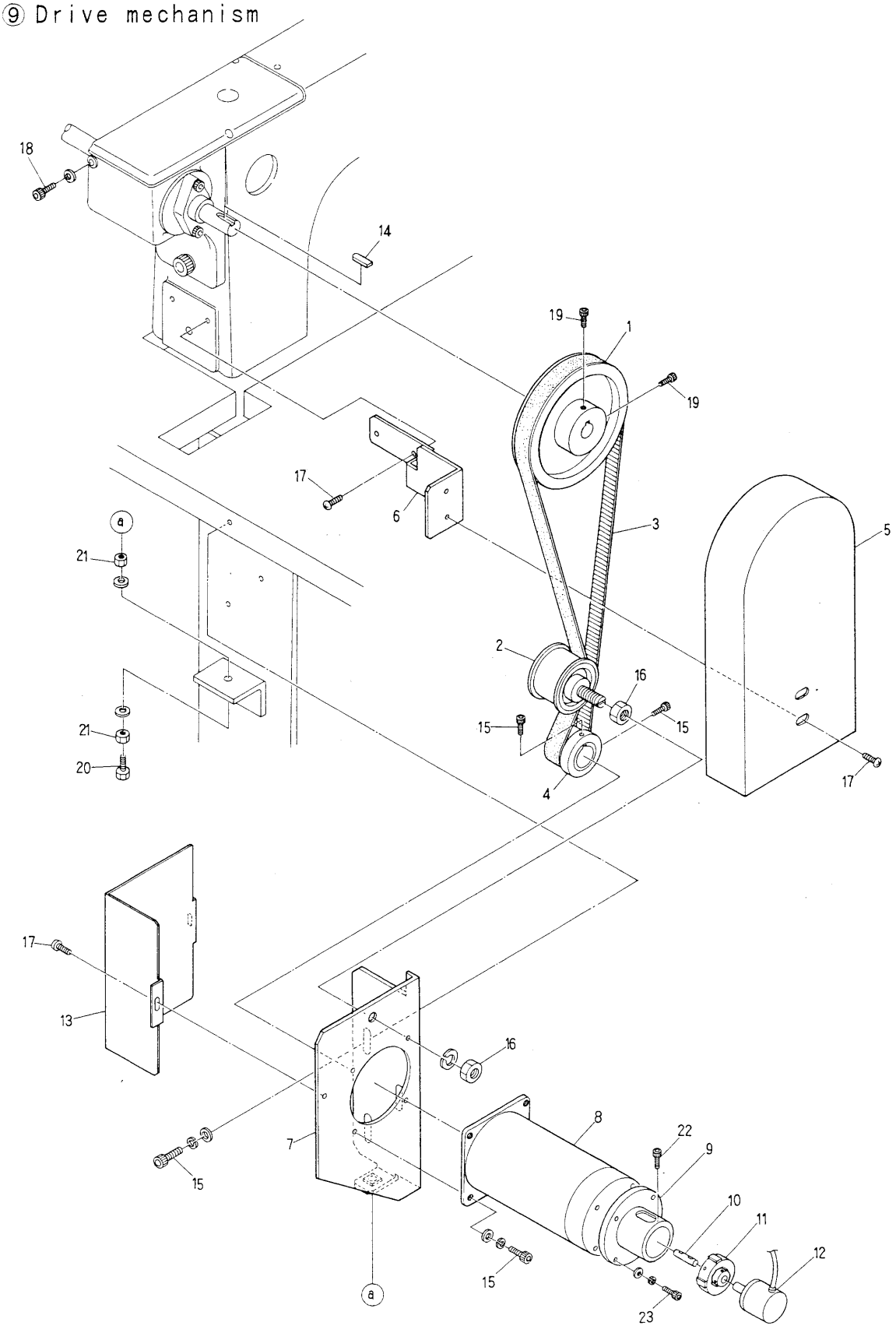

⑨ Drive mechanism

ITEM	PART No.	LIST No.	DESCRIPTION	Q'TY	REMARK
1	31R3U00	KU312730	Timing pully (P78-5M2-20-6F)	1	
2	920C0	A9020120	Flange idler (TPAWL-50)	1	
3	920B6	A9020116	Timing belt 1025-5M2-20	1	
4	31R2U00	KU312720	Motor pully (P26-5M2-20-6F)	1	
5	31R4U01	KU312741	Belt cover	1	
6	31R5U01	KU312751	Belt cover bracket	1	
7	3110U00	KU310100	Motor base (PROFIT-802)	1	
8	3113T00	MT310130	DC Motor (DTM-5270C)	1	
9	31DET00	MT314420	Encorder collar	1	
10	31DDT00	MT314410	Encorder shaft	1	
11	5124C	KC510240	ML-27-6 Rateral coupling	1	
12	5121T00	MT510210	Position corder (LBJ-007-600)	1	
13	3115U02	KU310152	Pully cover	1	
14	31GJU00	KU315250	Key (5×5×28.5)	1	
15			Hex, socket bolt M6×15		
16			Hex, nut M10		
17			Truss screw M4×6		
18			Hex, socket bolt M6×60		
19			Hex, socket bolt M6×20		
20			Hex, bolt M8×45		
21			Hex, nut M8		
22			Hex, socket bolt M2×12		
23			Hex, socket bolt M4×12		

⑩ Pantograph drive mechanism I

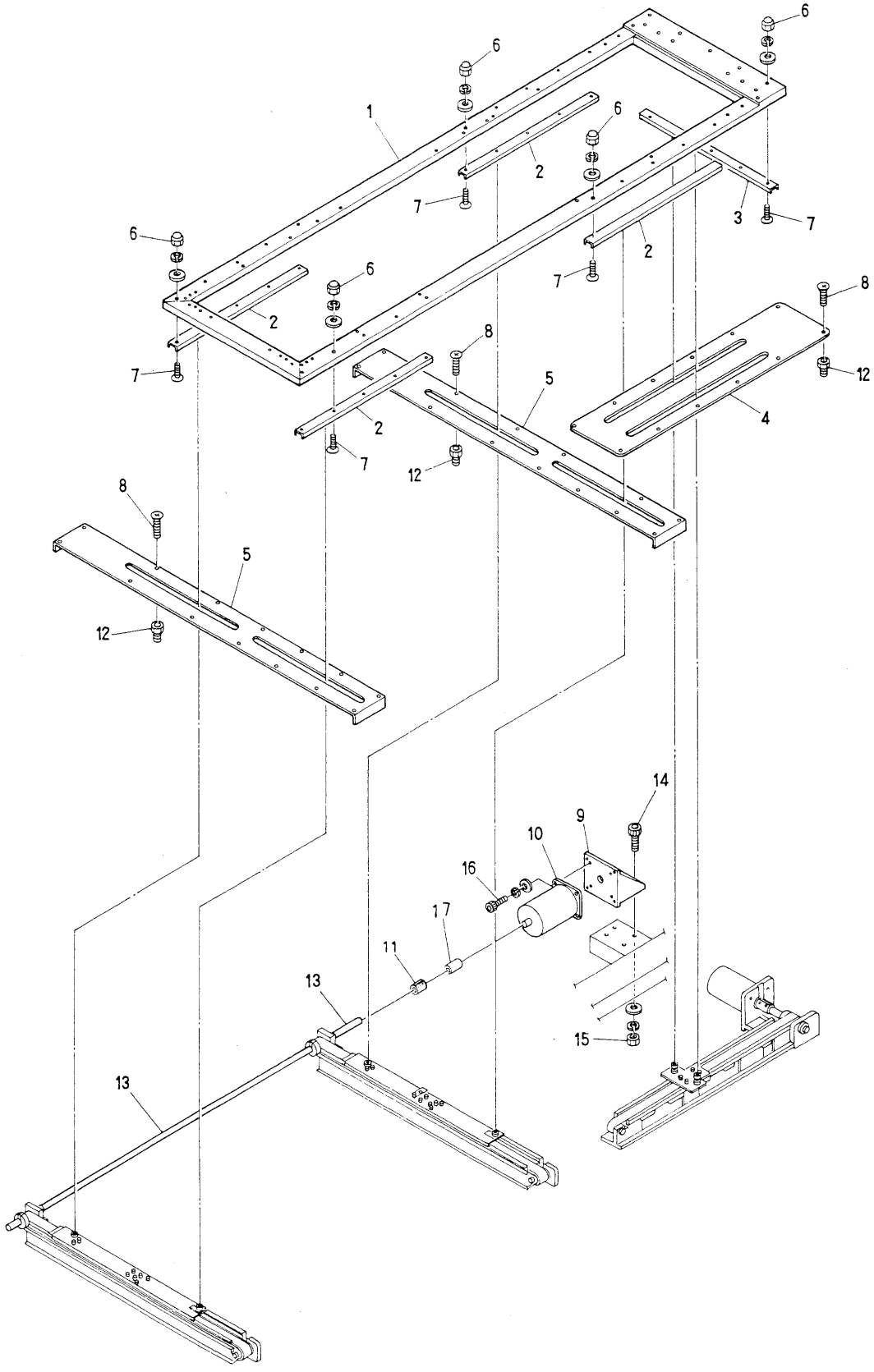

⑩ Pantograph drive mechanism Ⅰ

ITEM	PART No.	LIST No.	DESCRIPTION	Q'TY	REMARK
1	4651U01	KU460511	Pantograph ASSY (Profit-702 320×450)	1	
2	4842N00	KN480420	Guide rail (920L)	4	
3	4835C	KC480350	Guide rail (470L)	1	
4	48A5U00	KU481050	V-rail cover (480 stroke)	1	
5	4815C	KC480150	H-center rail cover	2	
6			Cap nut M4		
7			Flush screw M4×12		
8			Flush screw M4×6		
9	4715U01	KU470151	H-pulse motor bracket	1	
10	4711T00	MT470110	Pulse motor (103-845-1111)	1	
11	48J3H01	HH481931	Pulse motor coupling	1	
12			Nut M4		
13	4970U00	KU490700	H-pulse motor connecting shaft (PR-702)	1	
14			Hex. socket bolt M6×22		
15			Hex. nut M6		
16			Hex. socket bolt M5×18		
17	48X6T00	MT483360	Coupling bush for pulse motor	1	

⑪ Pantograph drive mechanism (H) Ⅱ

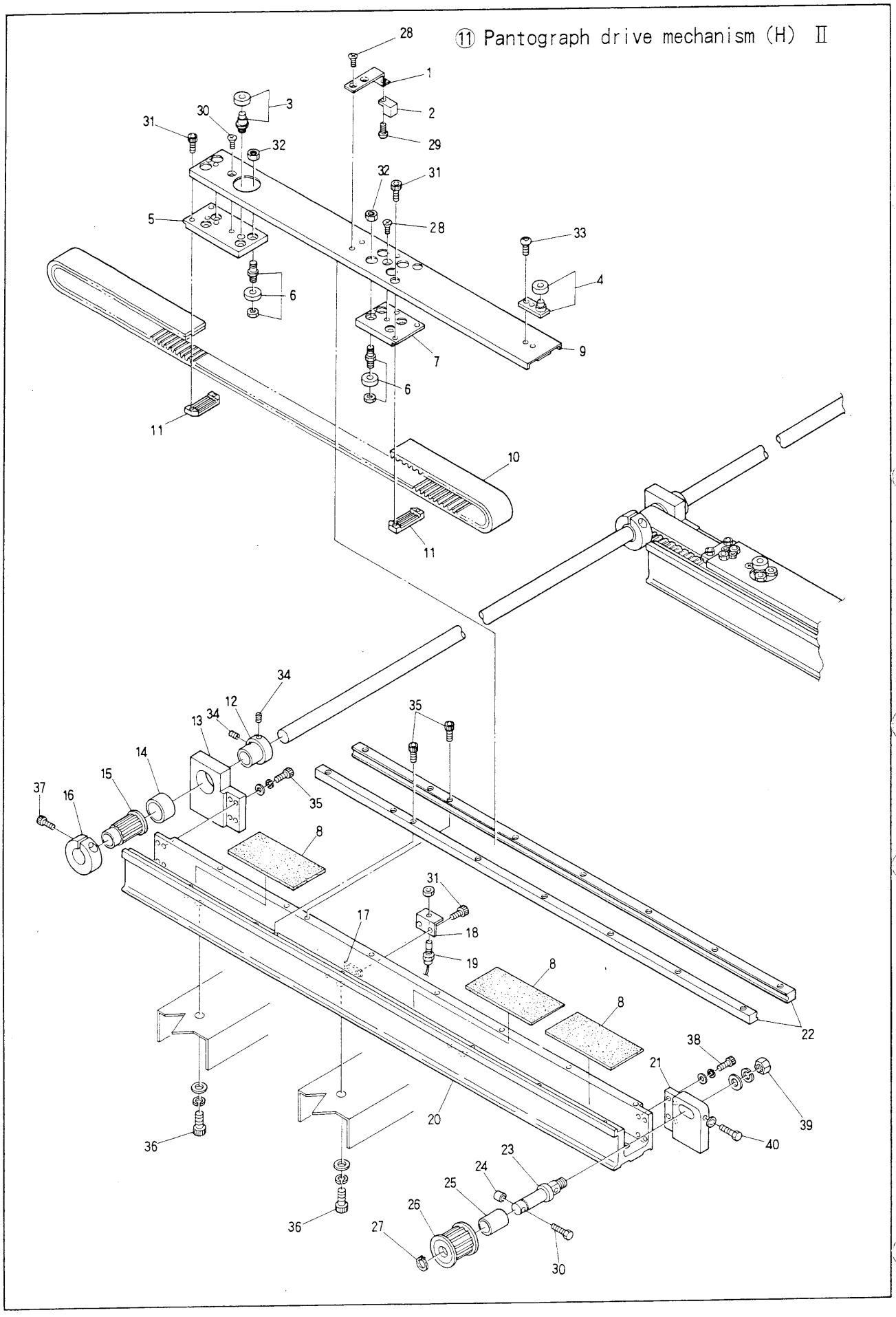

⑪ Pantograph drive mechanism (H) II

ITEM	PART No.	LIST No.	DESCRIPTION	Q'TY	REMARK
1	463U02	KU460342	H pantograph magnet bracket	1	
2	95226	A9052026	Magnet M-102	1	
3	91006	A9010006	Bearing (625zz)(1650) 804	1	
4	48X9P00	HP483390	Bearing pin ASSY (H)	1	
5	48S7N00	KN482870	H roller base (Rear)	1	
6	48T5P00	HP482950	Roller pin assy A	8	
7	48S8N00	KN482880	H roller base (Front)	1	
8	4806N01	KN480061	Rail base felt 100×38×6	3	
9	48Y4U00	KU483440	H member connecting channel (BEAT)	1	
10	92098	A9020098	Timing belt 300S5M2000	1	
11	48T4P00	HP482940	Timing belt rack (5M)	2	
12	48J7H	HH481970	Pulse motor connecting shaft collar	1	
13	48K1N00	KN482010	H guide rear pulley bracket	1	
14	91163	A9011063	Needle bearing TLA 2016	1	
15	48T9P00	HP482990	Pantograph driving pulley (Rear) S5M	1	
16	48J8H	HH481980	Clamping ϕ19	1	
17	4627U00	KU460270	Plate nut M3	2	
18	4624T00	MT460240	RS-001 Bracket (V)	1	
	4646V01	KU460461	RS-001 Bracket (H.Rear)	1	
19	95224	A9052024	Switch RS-001	2	
20	48Y0N00	KN483400	H guide rail base (BESR)	1	
21	48K0N00	KN482000	H guide front pulley bracket	1	
22	48Y5N00	KN483450	V guide rail (L=660)	2	
23	48J9H01	HH481991	Timing pulley shaft	1	
24	48L1H	HH482110	Timing pulley shaft bolt cap	1	
25	91179	A9011079	Needle bearing TA-1225	1	
26	48T8P00	HP482980	Pantograph driving pulley (Front) S5M	1	
27	91252	A9012052	E-ring (ϕ10)	1	
28			Flush screw M4×6		
29			Screw M3×6		
30			Hex. bolt M4×40		
31			Hex. socket bolt M3×6		
32			Hex. nut M5		
33			Button bolt M4×6		
34			Hex. socket set screw M5×8		
35			Hex. socket bolt M4×15		
36			Hex. socket bolt M8×20		
37			Hex. socket bolt M5×20		
38			Hex. socket bolt M4×18		
39			Hex. nut M8		
40			Hex. bolt M4×25		

⑫ Pantograph drive mechanism (V) Ⅲ

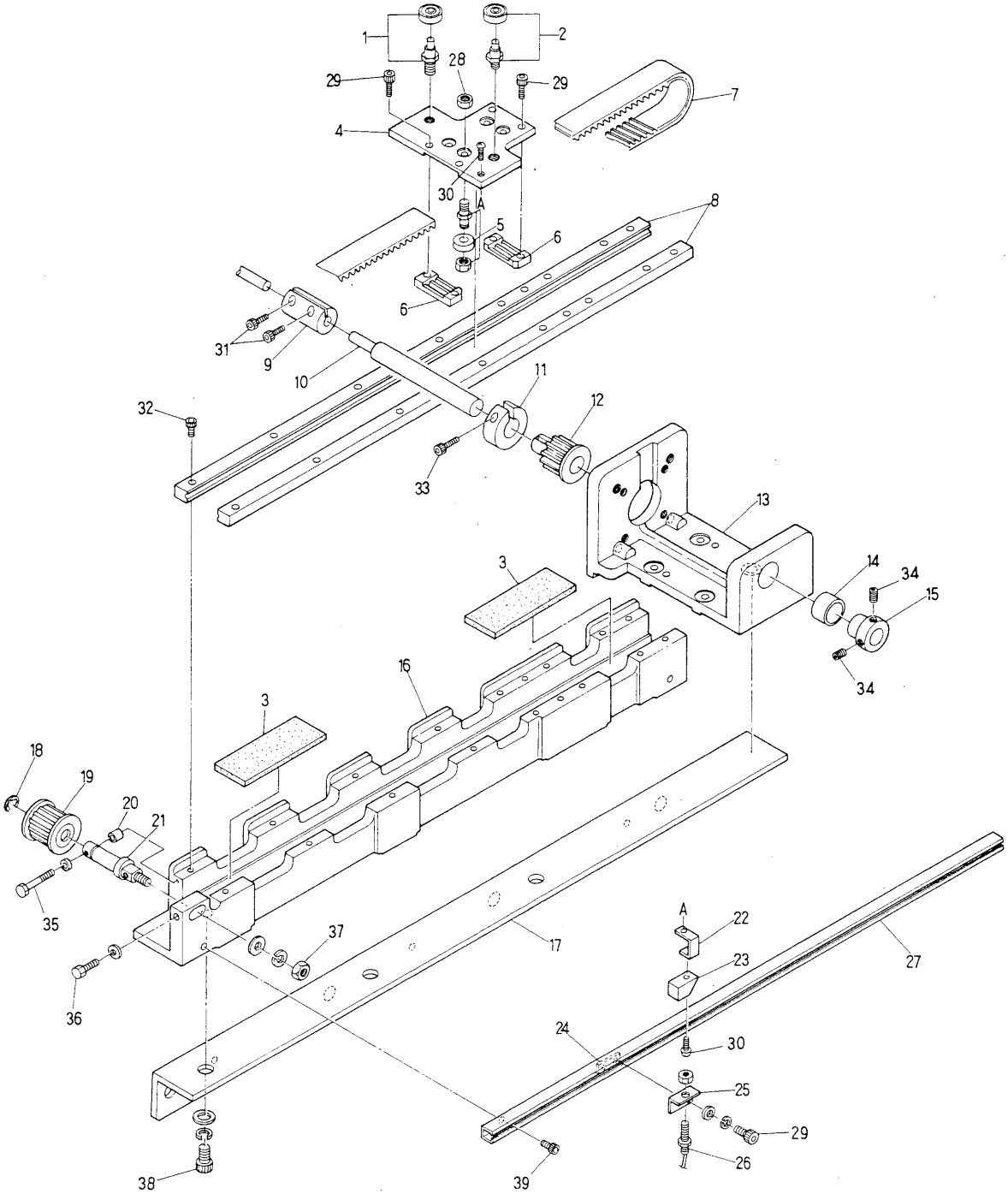

⑫ Pantograph drive mechanism (V) Ⅲ

ITEM	PART No.	LIST No.	DESCRIPTION	Q'TY	REMARK
1	48V1P01	HP483111	Bearing pin ASSY B	1	
2	48X7P00	HP483370	Bearing pin ASSY	1	
3	4806N01	KN480061	Rail base felt 100×38×6	2	
4	48V8U00	KU483180	V roller base (5M-30)	1	
5	48T5P00	HP482950	Roller pin assy A	4	
6	48T4P00	HP482940	Timing belt rack (5M)	2	
7	92098	A9020098	Timing belt 300S5M2000	1	
8	48T1P00	HP482910	V guide rail (L=1060)	2	
9	48J3H01	HH481931	Pulse motor coupling (804,806)	1	
10	4918U00	KU490180	V timing belt shaft (AT804,806,808)	1	
11	48J8H	HH481980	Clamping φ19	1	
12	48T9P00	HP482990	Pantograph driving pulley (Rear) S5M	1	
13	4710U00	KU470100	V pulse motor bracket	1	
14	91163	A9011063	Needle bearing TLA 2016	1	
15	48J7H	HH481970	Pulse motor connecting shaft collar	1	
16	4813U00	KU480130	V guide rail base	1	
17	4746U00	KU470460	V guide rail base bracket (480 stroke)	1	
18	91252	A9012052	E-ring (φ10)	1	
19	48T8P00	HP482980	Pantograph driving pulley (Front) S5M	1	
20	48L1H	HH482110	Timing pulley shaft bolt cap	1	
21	48J9H01	HH481991	Timing pulley shaft	1	
22	4632U01	KU460321	V pantograph origin point magnet bracket	1	
23	95226	A9052026	Magnet M-102	1	
24	4627U00	KU460270	Plate nut M3	2	
25	4624T00	MT460240	RS-001 bracket (V)	2	
26	95224	A9052024	Switch RS-001	2	
27	4636U00	KU460360	V pantograph origin point rail	1	
28			Hex. nut M5		
29			Hex. socket bolt M3×6		
30			Screw M3×6		
31			Hex. socket bolt M5×20		
32			Hex. socket bolt M4×15		
33			Hex. socket bolt M5×15		
34			Hex. socket set screw M5×8		
35			Hex. bolt M4×40		
36			Hex. bolt M4×25		
37			Hex. nut M8		
38			Hex. socket bolt M8×20		
39			Hex. socket bolt M4×6		

⑬ Control system

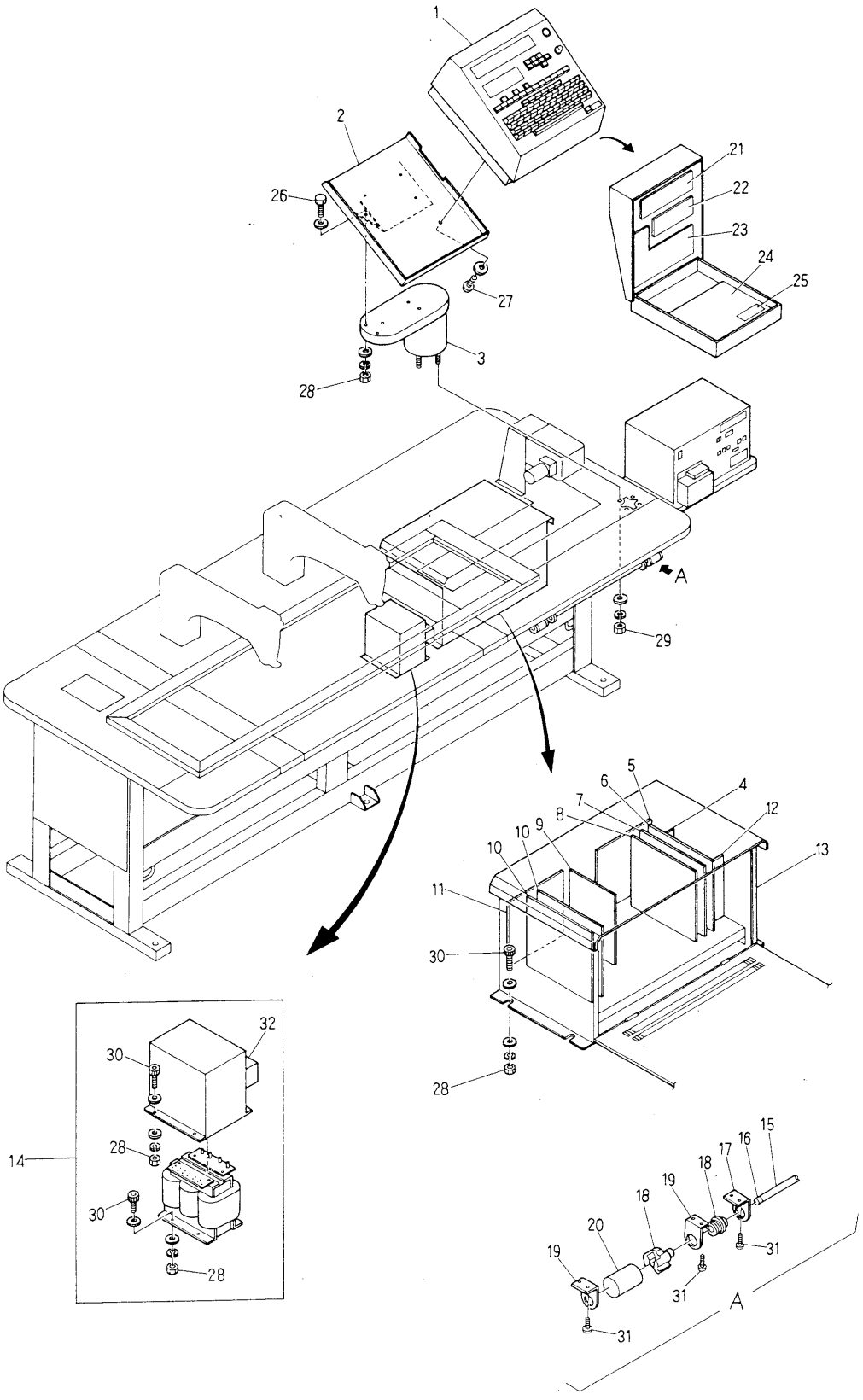

⑬ Control system

ITEM	PART No.	LIST No.	DESCRIPTION	Q'TY	REMARK
1	51H3UAU	EAN016A1	SMT contoroler	1	
2	51C7T00	MT511270	SMT contoroler fixing base	1	
3	51C1U01	KU511211	Contoroler fixing pipe	1	
4	55T0030	EBN00590	SDU memory board (7020-2600)	1	
5	55T0020	EBN00580	SDU contorol mother board (7020-2300)	1	
6	55T0040	EBN00600	SDU memory mother board (7020-2500)	1	
7	55T0060	EBN00620	SDU contorol board (7020-2100)	1	
8	55T0070	EBN00630	SDU power board (7020-2200)	1	
9	55T0010	EBN00570	Power amp driver board (7020-2900)	1	
10	55T0080	EBN00640	Stepping motor driver (7020-2800)	1	
11	55T0000	EBN00560	SDU Driver mother board (7020-2700)	2	
12	55T0050	EBN00610	SDU System memory board (7020-2400)	1	
13	51H4UAU	EAN016A2	Driver SDU	1	
14	51J6UAU	EAN021A3	806 Transformer (1P)	1	
	51J7UAU	EAN022A3	806 Transformer (3P)	1	
	51J5UAU	EAN020A3	804 Transformer (1P)	1	
15	5316F	KF530160	Bar switch	1	
16	5317F	KF530170	Bar switch cap	2	
17	5324C00	KC530240	Bar switch bracket (S.Cylinder)	2	
18	5311F	KF530110	Push botton switch MS320(Red)	1	
	5312F	KF530120	Push botton switch MS319(Green)	1	
19	5323C00	KC530230	Bar switch bracket (L.Cylinder)	4	
20	5315F	KF530150	Push botton switch cap	2	
21	55T0110	EBN00670	STX indicater (7020-7600)	1	
22	55T0120	EBN00680	SMT indicater (7020-7500)	1	
23	55T0130	EBN00690	SMT keyboard (7020-7300)	1	
24	55T0140	EBN00700	SMT contorolboard (7020-7200)	1	
25	55T0150	EBN00710	SMT PSU-board (7020-7210)	1	
26			Hex, bolt M6×15		
27			Hex, bolt M4×15		
28			Hex, nut M6		
29			Hex, nut M8		
30			Hex, socket bolt M6×30		
31			Screw M4×20		
32	EE99342	FA911096	BEAT Nofuse braker	1	

⑭ Thread cutting mechanism I

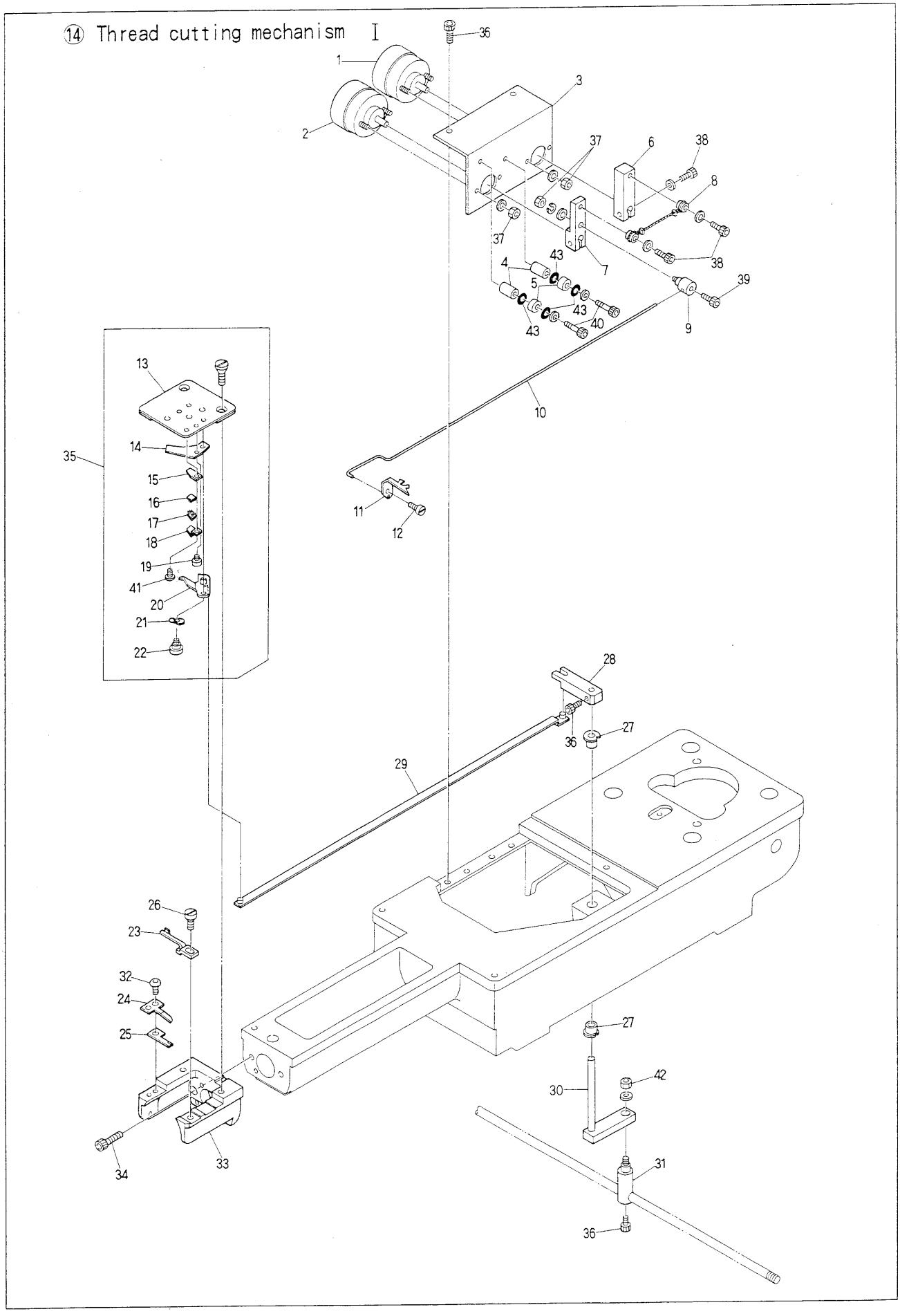

⑭ Thread cutting mechanism I

ITEM	PART No.	LIST No.	DESCRIPTION	Q'TY	REMARK
1	95612	A9056012	Rotary solenoid (3EL25X3.8.9)	1	
2	95608	A9056008	Rotary solenoid (3ER25X3.8.9)	1	
3	27J6C	KC271960	Solenoid stay	1	
4	27G5N01	KN271651	Stopper eccentric	2	
5	27G6N02	KN271662	Eccentric cover	2	
6	27J5C	KC271950	Solenoid lever B	1	
7	27J4C	KC271940	Solenoid lever A	1	
8	27J7C	KC271970	Drive rope	1	
9	27A4C01	KC271041	Conecting clamp	1	
10	27A3C01	KC271031	Hook drive rod	1	
11	27A2C01	KC271021	Hook	1	
12	27A0C	KC271000	Upper thread cutter turning shaft	1	
13	2794C	KC270940	Needle plate	1	
14	2796C	KC270960	Fixed cutter	1	
15	27C2C	KC271220	Lower thread support stay (Upper)	1	
16	27C1C01	KC271211	Magic tape (Upper)	1	
17	27C0C01	KC271201	Magic tape (Lower)	1	
18	27B9C01	KC271191	Lower thread support stay (Lower)	1	
19	2798C	KC270980	Fixed cutter set screw	1	
20	2795C	KC270950	Lower thread cutter	1	
21	91345	A9013045	Wave washer (WW5)	1	
22	2797C	KC270970	Lower thread cutter turret shaft	1	
23	2264C01	KC220641	Bobbin case fixing plate	1	
24	27I9N00	KN271890	Cutter fixing plate	1	
25	27G0N01	KN271601	Upper thread cutter	1	
26			Screw (SM11/64 40×7)	1	
27	912B4	A9012114	DU bush (MB0505-10FDU)	1	
28	27B2C	KC271120	Lower thread cutter drive lever (Upper)	1	
29	27A7C	KC271070	Lower thread cutter drive rod	1	
30	27B3C	KC271130	Lower thread cutter drive lever (Lower)	1	
31	2364F	KF230640	Lock connecting bar clamp	1	
32			Hex. socket botton bolt M3×6	1	
33	2112L00	KL210120	Needle plate bracket (SRE-T)	1	
34			Hex. socket bolt M5×15	1	
35	27B8C	KC271180	Cylinder needle plate CMP	1	
36			Hex. socket bolt M4×8		
37			Hex. nut M3		
38			Hex. socket bolt M4×10		
39			Hex. socket bolt M3×5		
40			Hex. socket bolt M4×18		
41			Pan screw M3×3		
42			Hex. nut M4		
43	27P4N00	KN272540	O-Ring 1AP8	4	

⑮ Thread cutting mechanism Ⅱ

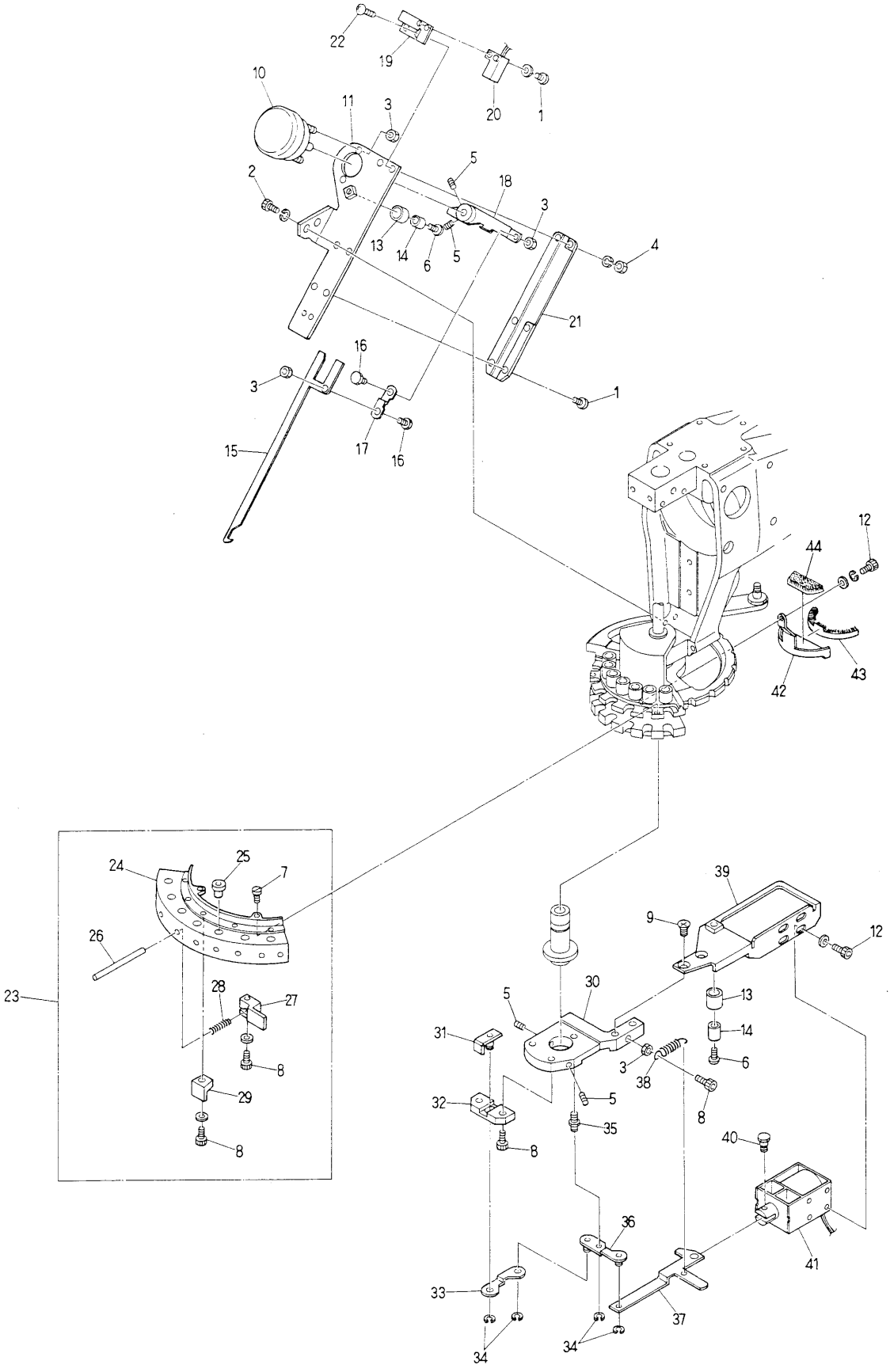

⑮ Thread cutting mechanism Ⅱ

(N=needle Q'ty)

ITEM	PART No.	LIST No.	DESCRIPTION	Q'TY	REMARK
1			Truss screw M3×6		
2			Hex, socket bolt M4×12		
3			Hex, nut M4		
4			Hex, nut M3		
5			Hex, socket set screw M4×8		
6			Truss screw M4×16		
7			Set screw (SM9/64 40)		
8			Hex, socket bolt M4×10		
9			Pan screw M4×8		
10	95607	A9056007	Rotary solenoid	1	
11	2708L00	KL270080	Thread away base	1	
12			Hex, socket bolt M3×6		
13	2715L00	KL270150	Eccentric cover	2	
14	2714L00	KL270140	Stopper eccent	2	
15	2710L00	KL270100	Thread away hook	1	
16	2713L00	KL270130	Lever connecting pin	2	
17	2712L00	KL270120	Connecting plate	1	
18	2711L00	KL270110	Thread away solenoid lever	1	
19	2726L00	KL270260	Switch stay	1	
20	95228	A9052028	Limit switch (RS-603)	1	
21	2709L00	KL270090	Thread away hook guide	1	
22			Truss screw M3×10		
23	2776C01	KC270761	Thread support apron UF Assy (5)	1	
	2776G	KG270760	Thread support apron US Assy (7)	1	
24	2728C03	KC270283	Thread support apron (5)	1	
	2728G02	KG270282	Thread support apron (7)	1	
25	2358F	KF230580	Take up lever ceramic	N×1	
26	2731G	KG270310	Thread support pin (7)	N×1	
27	2730C01	KC270301	Thread support clamp	N×1	
28	2727C01	KC270271	Support spring	N×1	
29	2729C02	KC270292	Thread support block	N×1	
30	2700L00	KL270000	Fixing base	1	
31	2702L00	KL270020	Thread support slider	1	
32	2701L00	KL270010	Slide base	1	
33	2703L00	KL270030	Driving plate	1	
34	912C7	A9012127	E-ring	4	
35	2704L00	KL270040	Lever turret pin	1	
36	2705L00	KL270050	Solenoid lever	1	
37	2706L00	KL270060	Lever connecting plate	1	
38	2740C	KC270400	Thread support lever spring	1	
39	2707L00	KL270070	Solenoid stay	1	
40	2710C01	KC270101	Solenoid pin	1	
41	95613	A9056013	Keep solenoid	1	
42	2728L00	KL270280	Thread hanger plate (5)	1	

ITEM	PART No.	LIST No.	DESCRIPTION	Q'TY	REMARK
43	2730L00	KL270300	Thread support pile mat UF (Upper) (5)	1	
	2732L00	KL270320	Thread support pile mat US (Upper) (7)	1	
44	2731L00	KL270310	Thread support pile mat UF (Lower) (5)	1	
	2733L00	KL270330	Thread support pile mat US (Lower) (7)	1	

⑯ Thread cutting mechanism Ⅲ

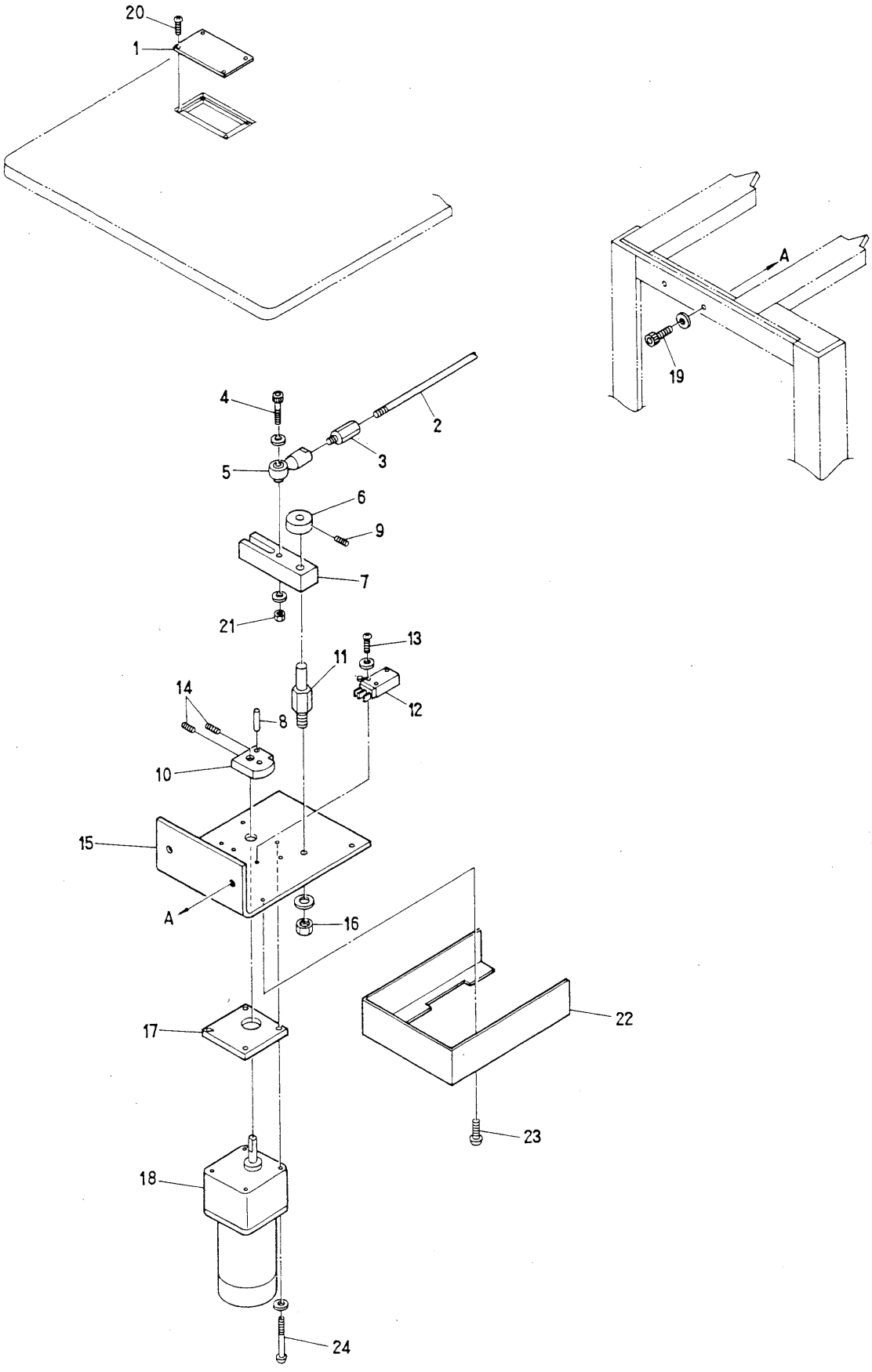

⑯ Thread cutting mechanism Ⅲ

ITEM	PART No.	LIST No.	DESCRIPTION	Q'TY	REMARK
1	27E4C	KC271440	Drive service cover	1	
2	3341C	KC330410	Lock connecting rod	1	
3	3351C	KC330510	Hex. connecting bar (L)	1	
4			Hex. socket bolt M6×20		
5	91202	A9012002	Uniball joint RB-6LS	1	
6	3318C	KC330180	Collar	1	
7	27B4C	KC271140	Motor lever	1	
8	27N5N00	KN272350	Drive pin	1	
9			Hex. socket set screw M5×6		
10	27B7C02	KC271172	Drive cam	1	
11	27B5C01	KC271151	Motor lever turret shaft	1	
12	95205	A9052005	Micro switch V-OIL 2255	1	
13			Screw M3×15 M3×20		
14			Hex. socket set screw M5×8		
15	27B6C02	KC271162	Motor bracket	1	
16			Hex. nut M8		
17	27E3C	KC271430	Motor specer	1	
18	96526	A9065026	Motor RM-H6A8PEAA(6RH-D36)	1	
19			Hex. socket bolt M8×30		
20			Flush screw M4×6		
21			Hex. nut M6		
22	27H1N02	KN271712	Motor bracket cover	1	
23			Truss screw M3×6		
24			Pan screw M5×65		

(HI)10.200

I N D E X

LIST No.	PART No.	PAGE No.	ITEM	LIST No.	PART No.	PAGE No.	ITEM
1PU02520	3A00010	17	16	EAN016A1	51H3UAU	27	1
A9010001	91001	13	37	EAN016A2	51H4UAU	27	13
A9010009	91009	11	10	EAN020A3	51J5UAU	27	14
A9010017	91017	5	5	EAN021A3	51J6UAU	27	14
A9010017	91017	17	5	EAN022A3	51J7UAU	27	14
A9011021	91121	7	22	EBN00560	55T0000	27	11
A9011022	91122	7	23	EBN00570	55T0010	27	9
A9011023	91123	7	21	EBN00580	55T0020	27	5
A9011049	91149	13	5	EBN00590	55T0030	27	4
A9011063	91163	23	14	EBN00600	55T0040	27	6
A9011063	91163	25	14	EBN00610	55T0050	27	12
A9011079	91179	23	25	EBN00620	55T0060	27	7
A9012001	91201	13	19	EBN00630	55T0070	27	8
A9012002	91202	13	28	EBN00640	55T0080	27	10
A9012002	91202	33	5	EBN00650	55T0090	9	6
A9012003	91203	7	58	EBN00660	55T0100	13	3
A9012005	91205	7	58	EBN00670	55T0110	27	21
A9012007	91207	5	34	EBN00680	55T0120	27	22
A9012008	91208	3	9	EBN00690	55T0130	27	23
A9012027	91227	5	57	EBN00700	55T0140	27	24
A9012052	91252	23	27	EBN00710	55T0150	27	25
A9012052	91252	25	18	FA911096	EE99342	27	32
A9012055	91255	13	38	HH120900	1290H	15	13
A9012114	912B4	29	27	HH330281	3328H01	13	1
A9012127	912C7	31	34	HH330620	3362H	13	6
A9012143	912E3	13	39	HH330670	3367H	13	34
A9012150	912F0	13	8	HH330810	3381H	13	13
A9013045	91345	29	21	HH481931	48J3H01	21	11
A9014063	91463	5	60	HH481931	48J3H01	25	9
A9020098	92098	23	10	HH481970	48J7H	23	12
A9020098	92098	25	7	HH481970	48J7H	25	15
A9020116	920B6	19	3	HH481980	48J8H	23	16
A9020120	920C0	19	2	HH481980	48J8H	25	11
A9052005	95205	33	12	HH481991	48J9H01	23	23
A9052024	95224	23	19	HH481991	48J9H01	25	21
A9052024	95224	25	26	HH482110	48L1H	23	24
A9052026	95226	23	2	HH482110	48L1H	25	20
A9052026	95226	25	23	HP231290	23C9P00	7	29
A9052028	95228	31	20	HP231301	23D0P01	7	27
A9056007	95607	31	10	HP231310	23D1P00	7	24
A9056008	95608	29	2	HP231330	23D3P00	11	9
A9056011	95611	13	24	HP231340	23D4P00	7	55
A9056012	95612	29	1	HP231370	23D7P00	7	26
A9056013	95613	31	41	HP231390	23D9P00	5	13
A9065026	96526	33	18	HP240020	2402P00	11	1

I N D E X

LIST No.	PART No.	PAGE No.	ITEM	LIST No.	PART No.	PAGE No.	ITEM
HP241110	24B1P00	9	2	KC220210	2221C	5	40
HP241130	24B3P00	11	19	KC220641	2264C01	29	23
HP241140	24B4P00	11	19	KC250471	2547C01	5	55
HP241150	24B5P00	9	11	KC250481	2548C01	5	54
HP241160	24B6P00	9	3	KC270101	2710C01	31	40
HP241170	24B7P00	9	9	KC270271	2727C01	31	28
HP241190	24B9P00	9	7	KC270283	2728C03	31	24
HP241210	24C1P00	11	18	KC270292	2729C02	31	29
HP241371	24D7P01	9	4	KC270301	2730C01	31	27
HP241390	24D9P00	9	5	KC270400	2740C	31	38
HP241400	24E0P00	9	13	KC270761	2776C01	31	23
HP241410	24E1P00	9	12	KC270940	2794C	29	13
HP241450	24E5P00	9	8	KC270950	2795C	29	20
HP241470	24E7P00	9	10	KC270960	2796C	29	14
HP250050	2505P00	9	17	KC270970	2797C	29	22
HP250581	2558P01	9	16	KC270980	2798C	29	19
HP321140	32B4P00	17	7	KC271000	27A0C	29	12
HP331531	33F3P01	13	25	KC271021	27A2C01	29	11
HP331550	33F5P00	13	22	KC271031	27A3C01	29	10
HP331560	33F6P00	13	33	KC271041	27A4C01	29	9
HP331570	33F7P00	13	14	KC271070	27A7C	29	29
HP331580	33F8P00	13	16	KC271120	27B2C	29	28
HP331590	33F9P00	13	17	KC271130	27B3C	29	30
HP331600	33G0P00	13	23	KC271140	27B4C	33	7
HP331660	33G6P00	13	20	KC271151	27B5C01	33	11
HP331940	33J4P00	13	9	KC271162	27B6C02	33	15
HP331950	33J5P00	13	36	KC271172	27B7C02	33	10
HP331960	33J6P00	13	10	KC271180	27B8C	29	35
HP482910	48T1P00	25	8	KC271191	27B9C01	29	18
HP482940	48T4P00	23	11	KC271201	27C0C01	29	17
HP482940	48T4P00	25	6	KC271211	27C1C01	29	16
HP482950	48T5P00	23	6	KC271220	27C2C	29	15
HP482950	48T5P00	25	5	KC271430	27E3C	33	17
HP482980	48T8P00	23	26	KC271440	27E4C	33	1
HP482980	48T8P00	25	19	KC271940	27J4C	29	7
HP482990	48T9P00	23	15	KC271950	27J5C	29	6
HP482990	48T9P00	25	12	KC271960	27J6C	29	3
HP483111	48V1P01	25	1	KC271970	27J7C	29	8
HP483370	48X7P00	23	3	KC320590	3259C	17	1
HP483370	48X7P00	25	2	KC330170	3317C	13	2
HP483390	48X9P00	23	4	KC330180	3318C	33	6
HP710790	7179P00	15	7	KC330410	3341C	7	15
HQ741F30	740F3Q0	13	32	KC330410	3341C	33	2
KC110910	1191C	3	24	KC330510	3351C	13	27
KC120841	1284C01	3	14	KC330510	3351C	33	3

I N D E X

LIST No.	PART No.	PAGE No.	ITEM	LIST No.	PART No.	PAGE No.	ITEM
KC480150	4815C	21	5	KF240200	2420F00	11	3
KC480350	4835C	21	3	KF240420	2442F	11	13
KC510240	5124C	19	11	KF240450	2445F	11	5
KC530230	5323C00	27	19	KF240460	2446F	11	12
KC530240	5324C00	27	17	KF240470	2447F	11	11
KC330310380	3331C	7	56	KF240480	2448F	11	8
KF220130	2213F	5	11	KF240490	2449F	11	7
KF220230	2223F	5	44	KF240610	2461F	11	14
KF220270	2227F	5	27	KF240900	2490F	15	5
KF220290	2229F	5	37	KF240931	2493F01	9	15
KF220310	2231F	5	49	KF250900	2590F	5	42
KF220370	2237F	5	52	KF330381	3338F01	7	14
KF220410	2241F	5	51	KF530110	5311F	27	18
KF220460	2246F	5	19	KF530120	5312F	27	18
KF220470	2247F	5	26	KF530150	5315F	27	20
KF220480	2248F	5	35	KF530160	5316F	27	15
KF220750	2275F00	5	49	KF530170	5317F	27	16
KF230010	2301F	7	42	KF540350	5435F	17	9
KF230150	2315F	7	59	KF710280	7128F	15	6
KF230180	2318F	7	43	KG120662	1266G02	3	2
KF230210	2321F	7	45	KG210911	2191G01	5	56
KF230230	2323F	7	49	KG230020	2302G	7	44
KF230240	2324F	7	50	KG230610	2361G	7	17
KF230250	2325F	7	51	KG241020	24A2G	9	1
KF230320	2332F	7	2	KG241031	24A3G01	15	4
KF230420	2342F	5	30	KG270282	2728G02	31	24
KF230450	2345F	7	28	KG270310	2731G	31	26
KF230480	2348F	7	30	KG270760	2776G	31	23
KF230500	2350F	7	37	KG330150	3315G	13	18
KF230512	2351F02	7	3	KG711170	71B7G00	15	3
KF230521	2352F01	7	4	KL210000	2100L00	5	23
KF230580	2358F	7	40	KL21000T	2100L0T	5	23
KF230580	2358F	31	25	KL210010	2101L00	5	23
KF230620	2362F	13	35	KL21001T	2101L0T	5	23
KF230630	2363F	7	10	KL210120	2112L00	29	33
KF230630	2363F	13	26	KL210130	2113L00	5	47
KF230640	2364F	7	12	KL210140	2114L00	5	17
KF230640	2364F	29	31	KL220000	2200L00	5	16
KF230650	2365F	7	9	KL220010	2201L00	5	24
KF230661	2366F01	7	19	KL220020	2202L00	5	29
KF230670	2367F	7	20	KL220030	2203L00	5	15
KF230910	2391F	7	47	KL220040	2204L00	5	6
KF230920	2392F	7	46	KL220050	2205L00	5	21
KF230930	2393F	7	48	KL220060	2206L00	5	25
KF240030	2403F	11	2	KL220070	2207L00	5	36

I N D E X

LIST No.	PART No.	PAGE No.	ITEM	LIST No.	PART No.	PAGE No.	ITEM
KL220080	2208L00	5	12	KL270290	2729L00	31	42
KL220090	2209L00	5	4	KL270300	2730L00	31	43
KL220100	2210L00	5	1	KL270310	2731L00	31	44
KL220110	2211L00	5	3	KL270320	2732L00	31	43
KL220120	2212L00	5	41	KL270330	2733L00	31	44
KL220130	2213L00	5	14	KL320000	3200L00	17	6
KL220140	2214L00	5	20	KL320020	3202L00	17	3
KL220150	2215L00	5	8	KN230410	2341N00	5	31
KL230000	2300L00	7	1	KN230430	2343N00	5	33
KL230010	2301L00	7	34	KN271601	27G0N01	29	25
KL230020	2302L00	7	32	KN271651	27G5N01	29	4
KL230030	2303L00	7	33	KN271662	27G6N02	29	5
KL230050	2305L00	7	54	KN271712	27H1N02	33	22
KL230070	2307L00	7	39	KN271890	27I9N00	29	24
KL230080	2308L00	7	39	KN272350	27N5N00	33	8
KL230110	2311L00	7	53	KN272540	27P4N00	29	43
KL230120	2312L00	7	53	KN480061	4806N01	23	8
KL230130	2313L00	7	52	KN480061	4806N01	25	3
KL230140	2314L00	7	31	KN480420	4842N00	21	2
KL230170	2317L00	7	35	KN482000	48K0N00	23	21
KL230190	2319L00	7	41	KN482010	48K1N00	23	13
KL230200	2320L00	7	41	KN482870	48S7N00	23	5
KL230210	2321L00	7	60	KN482880	48S8N00	23	7
KL230220	2322L00	7	60	KN483400	48Y0N00	23	20
KL250010	2501L00	9	14	KN483450	48Y5N00	23	22
KL250040	2504L00	5	7	KU120800	1280U00	3	13
KL250050	2505L00	5	59	KU140550	1455U00	3	15
KL270000	2700L00	31	30	KU151623	15G2U03	3	1
KL270010	2701L00	31	32	KU151770	15H7U00	3	6
KL270020	2702L00	31	31	KU161622	16G2U02	3	5
KL270030	2703L00	31	33	KU310100	3110U00	19	7
KL270040	2704L00	31	35	KU310152	3115U02	19	13
KL270050	2705L00	31	36	KU310161	3116U01	17	10
KL270060	2706L00	31	37	KU312720	31R2U00	19	4
KL270070	2707L00	31	39	KU312730	31R3U00	19	1
KL270080	2708L00	31	11	KU312741	31R4U01	19	5
KL270090	2709L00	31	21	KU312751	31R5U01	19	6
KL270100	2710L00	31	15	KU312761	31R6U01	17	17
KL270110	2711L00	31	18	KU315250	31GJU00	19	14
KL270120	2712L00	31	17	KU331520	33F2U00	13	21
KL270130	2713L00	31	16	KU331711	33H1U01	13	30
KL270140	2714L00	31	14	KU331721	33H2U01	13	31
KL270150	2715L00	31	13	KU331730	33H3U00	13	29
KL270260	2726L00	31	19	KU331740	33H4U00	13	7
KL270280	2728L00	31	42	KU331750	33H5U00	13	40

I N D E X

LIST No.	PART No.	PAGE No.	ITEM
KU331760	33H6U00	13	41
KU331900	33J0U00	13	15
KU331910	33J1U00	13	4
KU331930	33J3U00	13	12
KU460270	4627U00	23	17
KU460270	4627U00	25	24
KU460321	4632U01	25	22
KU460342	4634U02	23	1
KU460360	4636U00	25	27
KU460461	4646U01	23	18
KU460511	4651U01	21	1
KU470100	4710U00	25	13
KU470151	4715U01	21	9
KU470460	4746U00	25	17
KU480130	4813U00	25	16
KU481050	48A5U00	21	4
KU483180	48V8U00	25	4
KU483440	48Y4U00	23	9
KU490180	4918U00	25	10
KU490700	4970U00	21	13
KU510420	5142U00	9	18
KU511211	51C1U01	27	3
KU51076102520	5176C	15	1
KU51087102520	5187N00	15	1
MA140380	1438A	3	3
MA140530	1453A	3	17
MA140570	1457A	3	16
MA140580	1458A	3	18
MA140690	1469A	3	4
MA140740	1474A	3	7
MA140750	1475A	3	11
MA140760	1476A	3	10
MA140780	1478A	3	8
MA140960	1496A00	3	12
MA220510	2251A	5	45
MA250131	2513A01	5	43
MT310130	3113T00	19	8
MT314410	31DDT00	19	10
MT314420	31DET00	19	9
MT460240	4624T00	23	18
MT460240	4624T00	25	25
MT470110	4711T00	21	10
MT483360	48X6T00	21	17
MT510210	5121T00	19	12
MT510671	5167T01	15	10
MT510681	5168T01	15	8
MT510791	5179T01	15	9
MT511270	51C7T00	27	2
WW310300	3130W00	17	12
WW310310	3131W00	17	14