Barudan

HIGH SPEED AUTOMATIC EMBROIDERY MACHINE

MODEL

BESRE
BEMRE
BEXE

PARTS LIST

BARUDAN CO., LTD.

ADDRESS 906 JOSUIJI
ICHINOMIYA-CITY· AICHI-PREF·
JAPAN
TEL. <0586>76-1137
FAX. <0586>77-1499
TELEX 4573268 BARUNA J
CABLE BARUNA ICHINOMIYA

BESRE・BEMRE・BEXE
HIGH SPEED AUTOMATIC EMBROIDERY MACHIN
PART LIST

INDEX

ITEM No.	Page No.
Machine layout (BESRE / BEMRE / BEXE)	1
①Table・Frame	4
②Sewing head	6
③Needle bar・Take up lever mechanism	8
④Jamp mechanism (5・7)	10
⑤Thread guide mechanism (5) Ⅰ	12
⑤Thread guide mechanism (7) Ⅱ	14
⑥Drive mechanism	16
⑦Option	18
⑧Color change mechanism	20
⑨Pantograph drive mechanism (V・H-Direction) Ⅰ－①	22
⑨Pantograph drive mechanism (V・H-Direction) Ⅰ－②	24
⑩Pantograph drive mechanism (H) Ⅱ	26
⑪Pantograph drive mechanism (V) Ⅲ	28
⑫Contorol system <BESRE>	30
⑫Contorol system <BEMRE>	32
⑫Contorol system <BEXE>	34
⑬Under thread cut sensorium mechanism Ⅰ	36
⑬Under thread cut sensorium mechanism Ⅱ	38
⑭Thread cutting mechanism Ⅰ	40
⑭Thread cutting mechanism Ⅱ	42
⑮Thread cutting drive mechanism <BESRE, BEXE> Ⅲ	44
⑮Thread cutting drive mechanism <BEMRE> Ⅲ	46

Machine layout <BESRE>

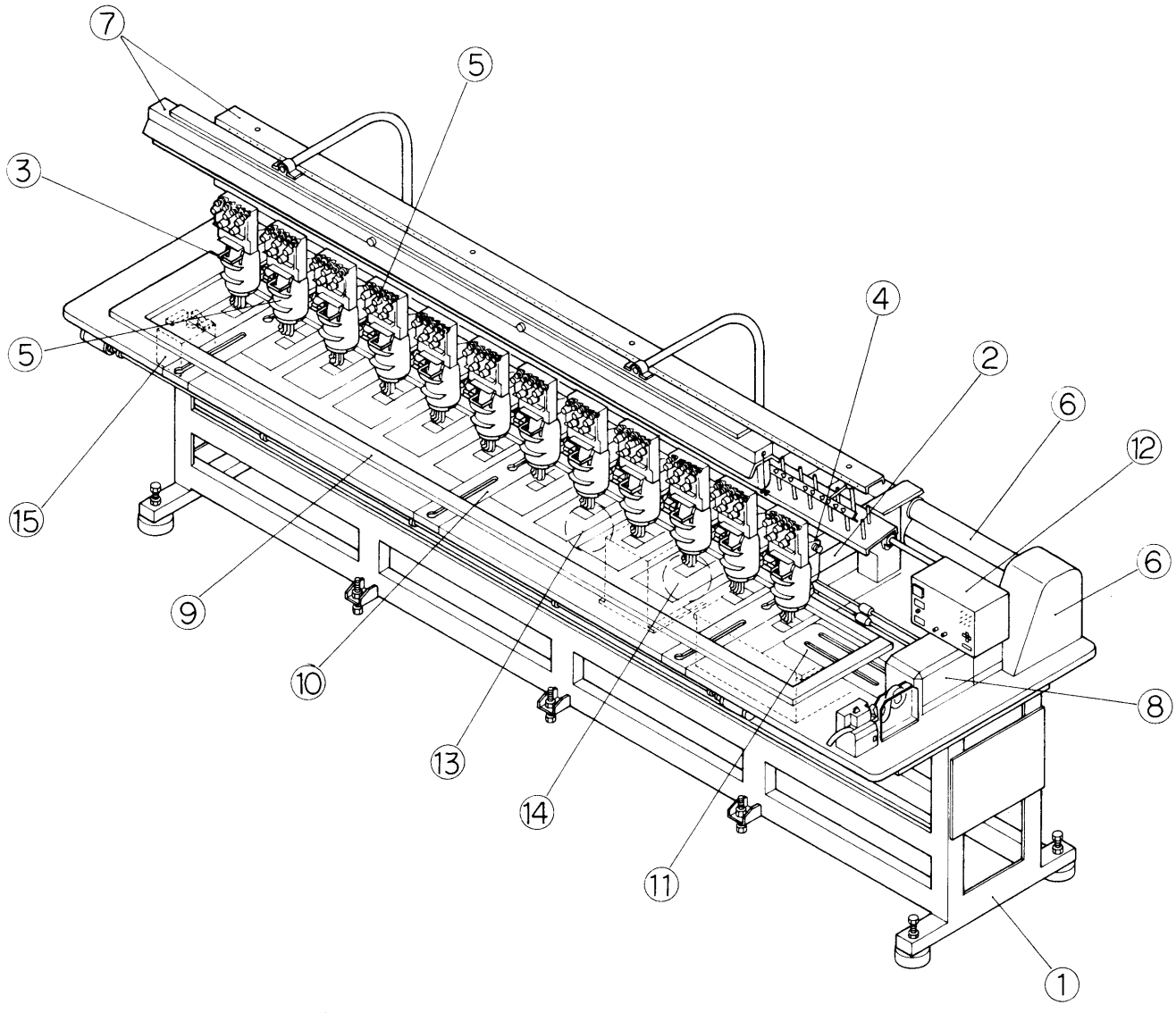

Machine layout <BEMRE>

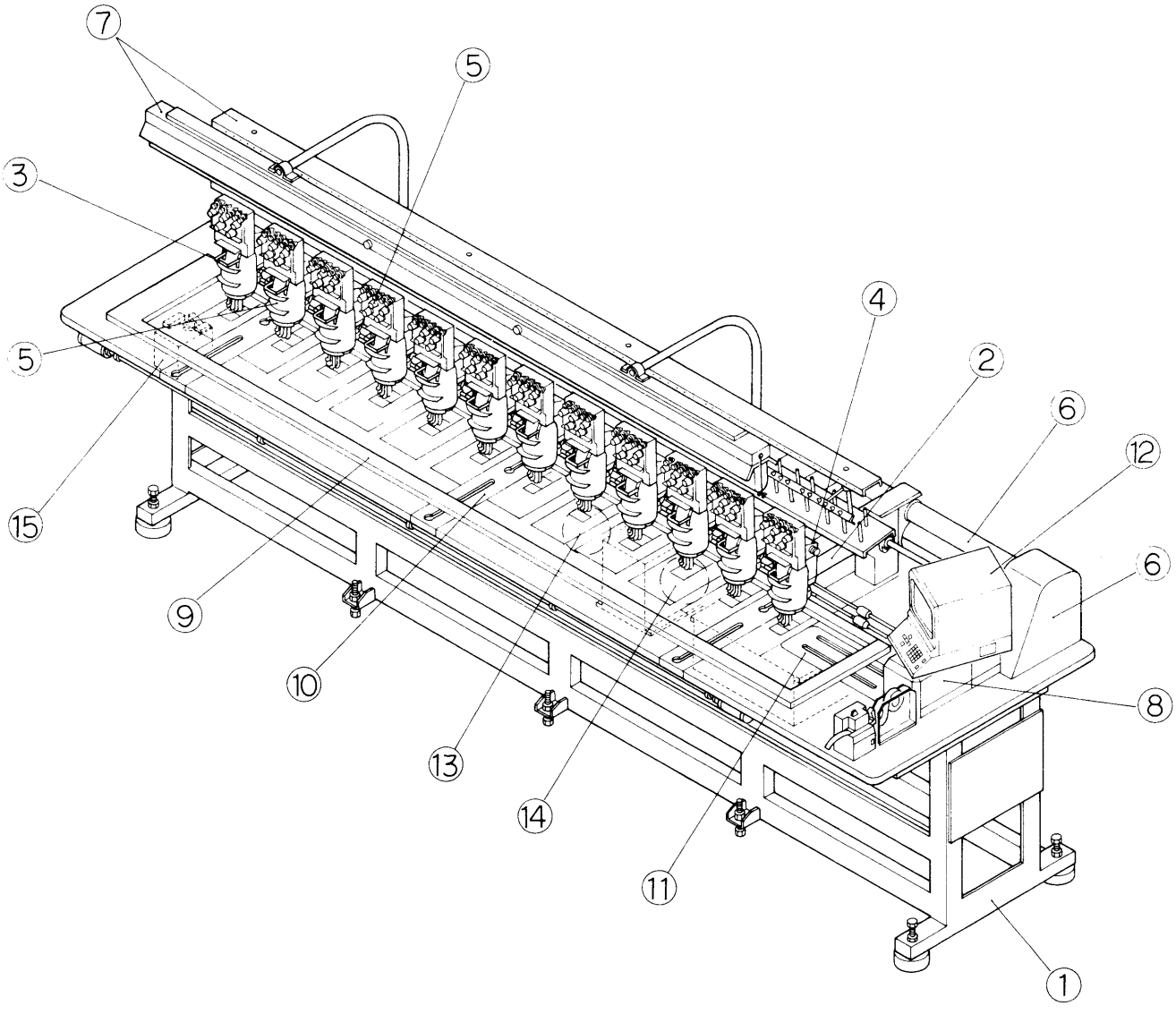

Machine layout <BEXE>

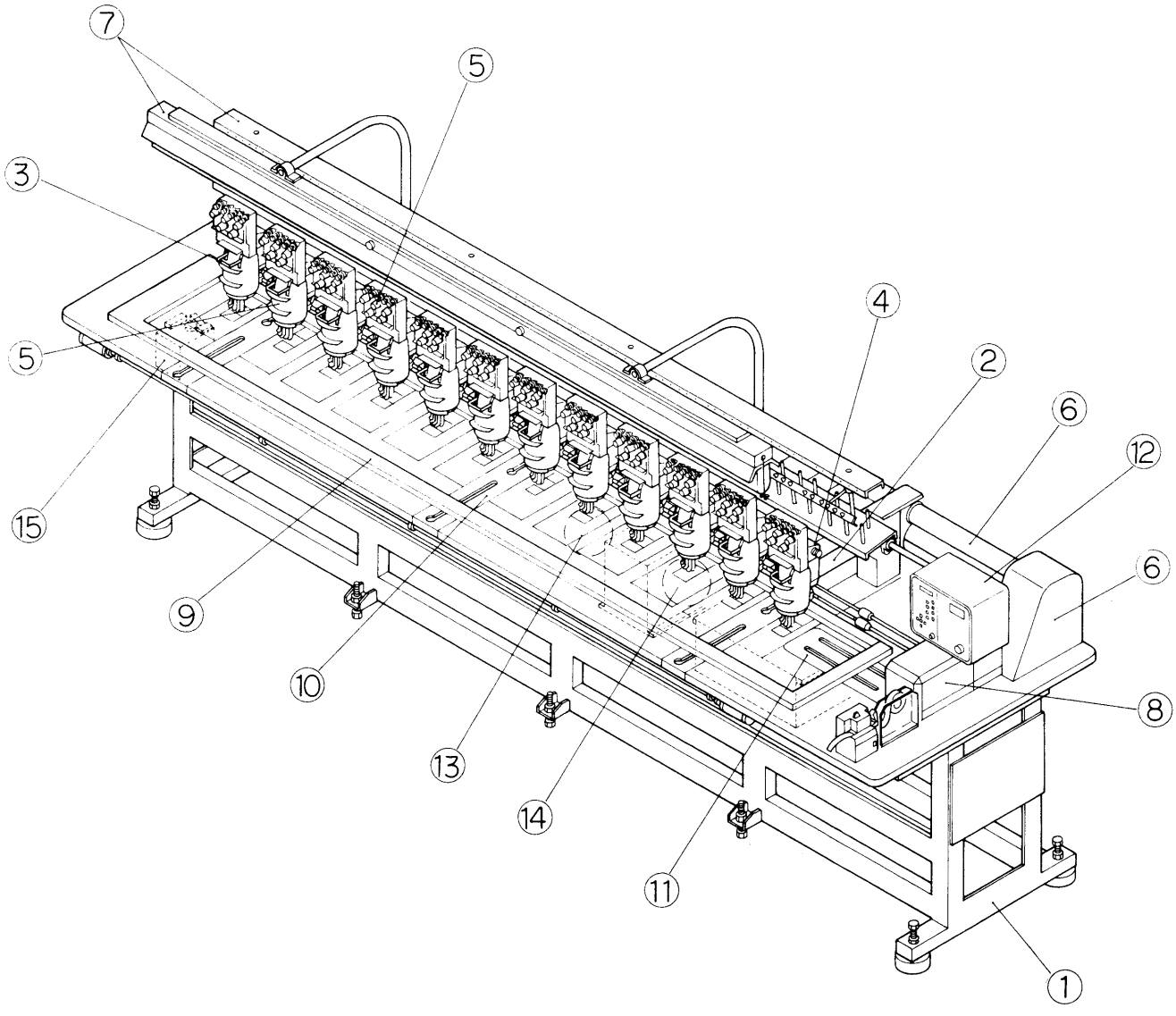

① Table ▪ Frame

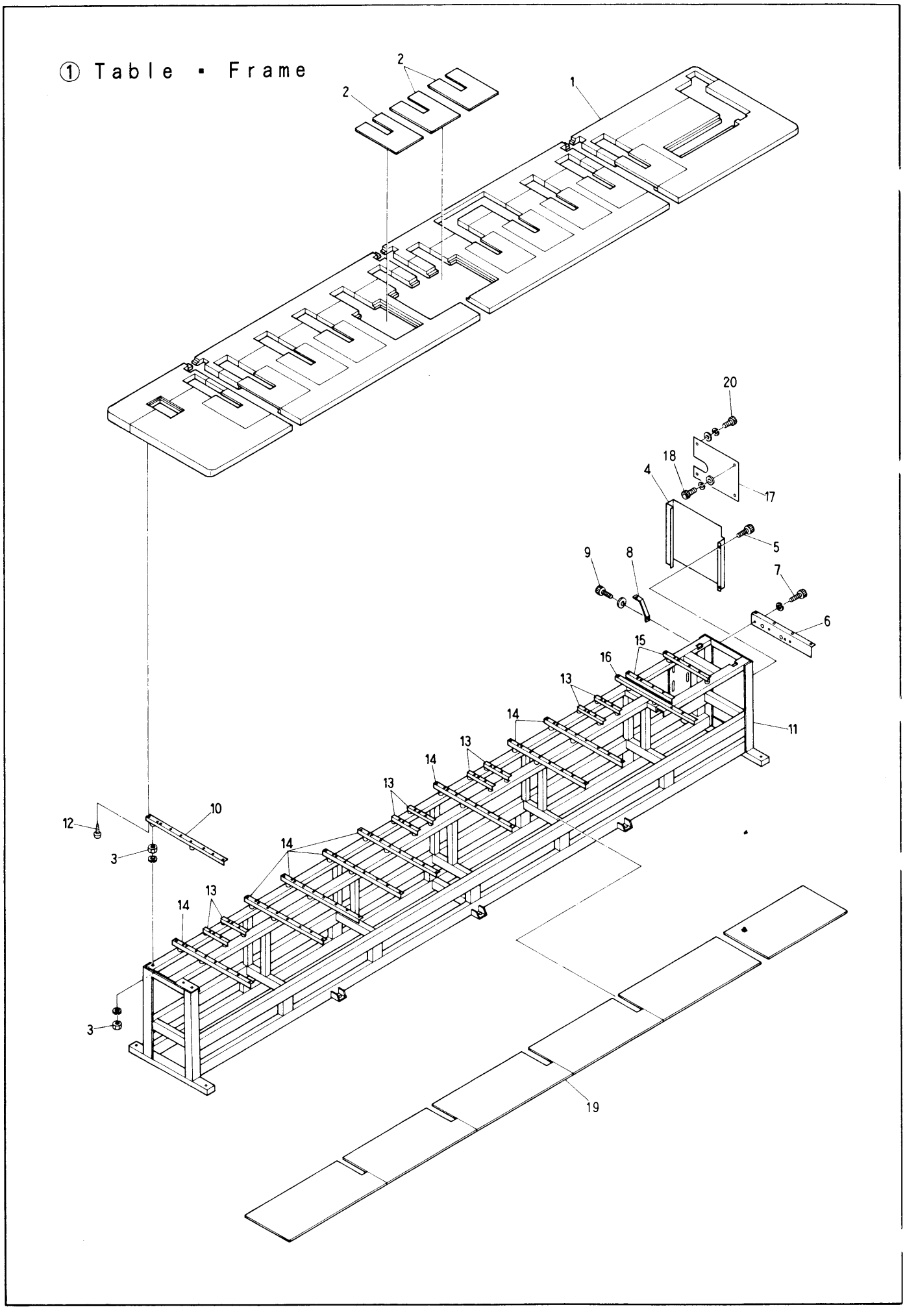

① Table ▪ Frame (※ Change the PART NO. by machine type ※※ Change number by machine type)

ITEM	PART No.	LIST No.	DESCRIPTION	Q'TY	REMARK
1	2B00010	1BL123804800	Table SRE-12 320×380/480	1	※
2	1541G02	KG150412	Table cover	1	
3			Hex nut3/8		
4	1191L00	KL110910	Frame side cover (R)		
5			Hex socket bolt M6X10		
6	14G5L00	KL141650	Table support (R)	1	
7			Hex, socket bolt M8X12		
8	14G6L00	KL141660	Table support (R) Rear	1	
9			Hex, socket bolt M6X12		
10	1286C	KC120860	HJ Table support 790L	1	
11	1C00010	1AL12304800	frame (SRE-12, 320×380/480)	1	
12			Wood screw 5.1X25		
13	1456C	KC140560	Table support No.4	8	※※
14	1453C	KC140530	Table support No.1 P214 (JMC)	8	※※
15	1284C01	KC120841	Table support (475L)	2	
16	1454C	KC140540	Table support		
17	3106L00	KL310060	Pulley cover		for America, Europe
18			Hex, socket bolt M6×6		
19	1518C01	KC150151	Shelf board (BESRE-12, 320×380/480)	1	※
20			Hex, socket bolt M6×15		

② Sewing head

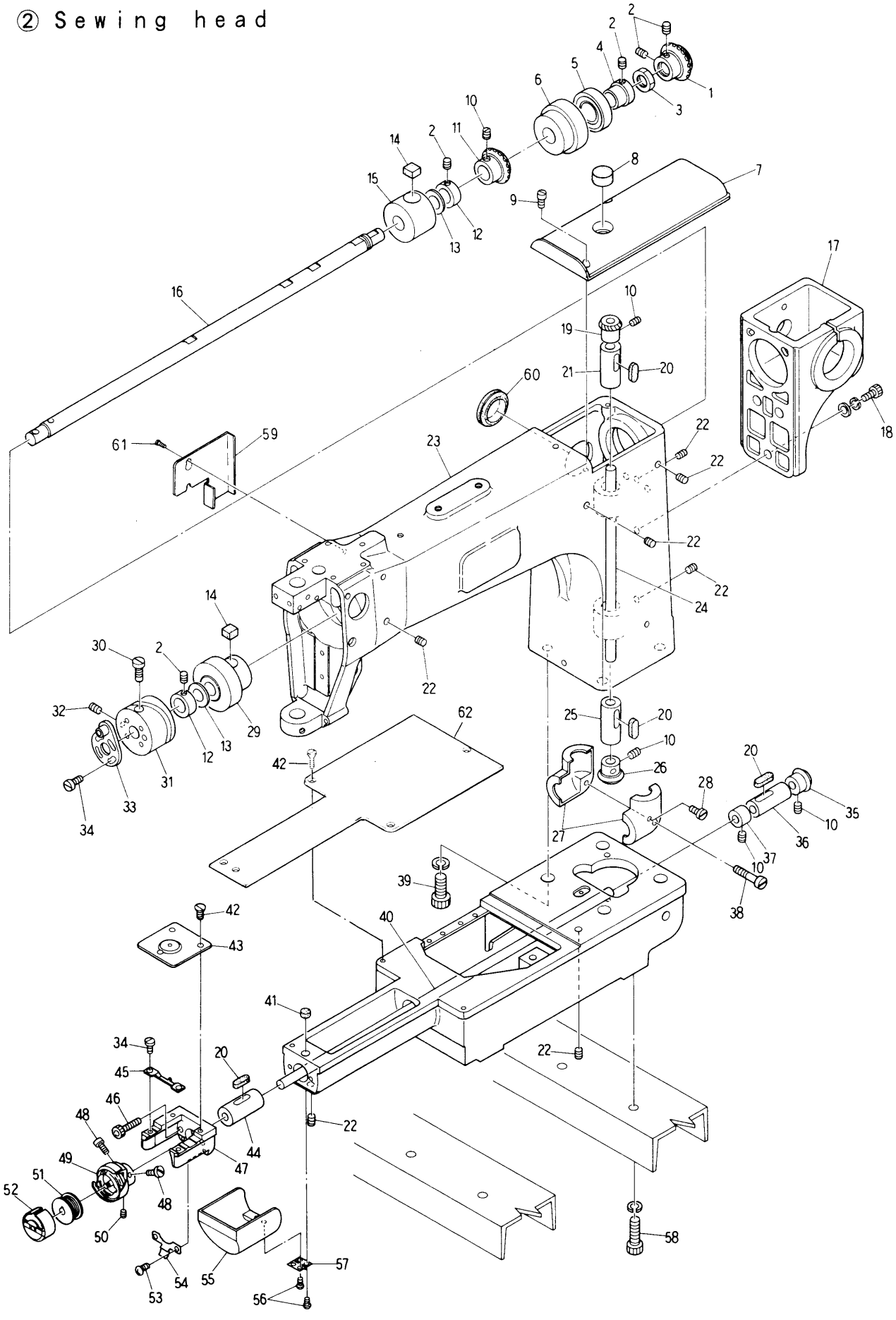

② Sewing head

ITEM	PART No.	LIST No.	DESCRIPTION	Q'TY	REMARK
1	2210L00	KL220100	Top shaft gear	1	
2			Hex, socket set screw M6×6		
3	2211L00	KL220110	Top shaft adjust nut M14	1	
4	2209L00	KL220090	Top shaft bearing collar (Reat)	1	
5	91017	A9010017	Bearing (6004ZZ)	1	
6	2204L00	KL220040	Top sraft bearing case	1	
7	2504L00	KL250040	Arm top cover	1	
8	2215L00	KL220150	Oil felt D	1	
9			Screw M4X10		
10			Screw (SM1/4 40×4)		
11	2213F	KF220130	Bevel gear (Top shaft)	1	
12	2208L00	KL220080	Top shaft collar	2	
13	23D9P00	HP231390	Thrust washer	2	
14	2213L00	KL220130	Oil felt B	2	
15	2203L00	KL220030	Top shaft metal (Middle)	1	
16	2200L00	KL220000	Top shaft	1	
17	2114L00	KL210140	Arm gear case	1	
18			Hex, socket bolt M6×25		
19	2246F	KF220460	Bevel gear (Vertical shaft upper)	1	
20	2214L00	KL220140	Oil felt C	4	
21	2205L00	KL220050	Vertical shaft metal (upper)	1	
22			Hex, socket set screw M6×8		
23	2100L00	KL210000	SRE Assy Head 7		
	2101L00	KL210010	SRE Assy Head 5		
	2100L0T	KL21000T	SRE Assy Head 7 (with thread cutter)		
	2101L0T	KL21001T	SRE Assy Head 5 (with thread cutter)		
24	2201L00	KL220010	Vertical shaft	1	
25	2206L00	KL220060	Vertical shaft metal (Lower)	1	
26	2247F	KF220470	Bevel gear (Vertical shaft (Lower))	1	
27	2227F	KF220270	Gear cover set	1	
28			Screw (SM15/64 28×24)		
29	2202L00	KL220020	Top shaft metal (Front)	1	
30	2342F	KF230420	Cam set screw	1	
31	2341N00	KN230410	Take up lever cam G	1	
32			Screw (SM15/64 28×10)		
33	2343N00	KN230430	90° Clamping	1	
34	91207	A9012007	Screw	6	
35	2248F	KF220480	Bevel gear (Bottom shaft)	1	
36	2207L00	KL220070	Bottom shaft metal (Rear)	1	
37	2229F	KF220290	Bottom shaft collar	1	
38			Screw (SM9/32 20×38)		
39			Hex, socket bolt M12×35		
40	2221C	KC220210	Bottom shaft	1	
41	2212L00	KL220120	Oil felt A	1	
42	2590F	KF250900	Needle plate set screw (SM11/64 40×7)	2	

② Sewing head

ITEM	PART No.	LIST No.	DESCRIPTION	Q'TY	REMARK
43	2513A01	MA250131	Needle plate	1	
44	2223F	KF220230	Bottom shaft metal (front)	1	
45	2251A	MA220510	Bobbin case fixing plate	1	
46			Hex. socket bolt M5×15		
47	2113L00	KL210130	Needle plate bracket (SRE)	1	(without cutter)
48			Screw (SM11/65 40×5)		
49	2231F	KF220310	Bobbin (HSL-A-M1Q)	1	
	2275F00	KF220750	Bobbin KHS 12-RYNW (Option)	1	
50			Screw (SM11/65 40×4)	1	
51	2241F	KF220410	Bobbin	1	
52	2237F	KF220370	Bobbin case (MK-3)	1	
53			Pan screw M3×6		
54	2548C01	KC250481	Barrel bed cover push spring	1	
55	2547C01	KC250471	Barrel bed cover	1	
56			Pan screw M3×6		
57	91227	A9012027	Butterfly nut (TH-TM-72)	1	
58			Hex. socket bolt M8×20		
59	2505L00	KL250050	Arm side cable cover	1	
60	91463	A9014063	Gromment C-30-SG-36A	1	
61			Binding screw M4×8		
62	2191G01	KG210911	Cylinder bed cover	1	

③ Needle bar · Take up lever mechanism

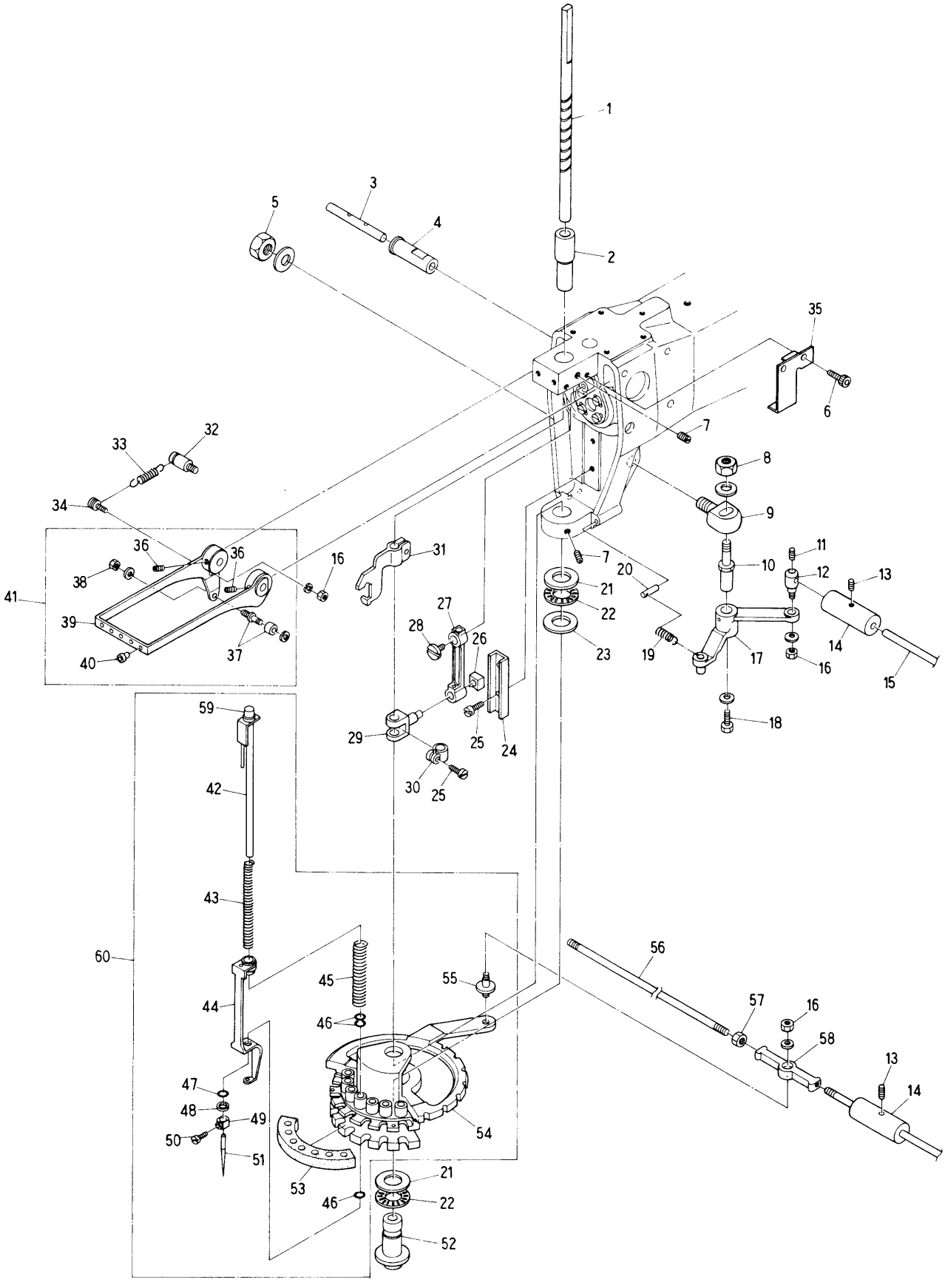

③ Needle bar ▪ Take up lever mechanism

(N=needle Q'ty)

ITEM	PART No.	LIST No.	DESCRIPTION	Q'TY	REMARK
1	2300L00	KL230000	Driving shaft	1	
2	2332F	KF230320	Driver shaft upper metal	1	
3	2351F02	KF230512	Take up lever shaft	1	
4	2352F01	KF230521	Take up lever metal	1	
5			Hex. nut M10		
6			Hex. socket bolt M4×8		
7			Screw M6×6		
8			Hex. nut M8		
9	2365F	KF230650	Lock lever bracket	1	
10	2363F	KF230630	Lock lever shaft	1	
11			Hex. socket set screw M4×6		
12	2364F	KF230640	Lock connection rod clamp	1	
13			Hex. socket set screw M5×5		
14	3338F01	KF330381	Lock bar hand grip	1	
15	3341C	KC330410	Lock connecting rod (2M)	3	
16			Hex. nut M4		
17	2361G	KG230610	~~US~~ Lock lever	1	
18			Hex. bolt M5×10		
19	2366F01	KF230661	Lock lever spring	1	
20	2367F	KF230670	Lock lever spring pin	1	
21	91123	A9011023	Thrust bearing (GS1528)	2	
22	91121	A9011021	Thrust bearing (NTB-1528)	2	
23	91122	A9011022	Thrust washer (AS-1528)	1	
24	23D1P00	HP231310	Guide box	1	
25			Screw (SM9/64 40×8)		
26	23D7P00	HP231370	Square ball	1	
27	23D0P01	HP231301	Clank rod	1	
28	2345F	KF230450	90° Clank screw fork	1	
29	23C9P00	HP231290	Needle bar driving	1	
30	2348F	KF230480	Needle shaft clamp	1	
31	2314L00	KL230140	Needle bar driver	1	
32	2302L00	KL230020	Take up lever spring shaft	1	
33	2303L00	KL230030	Take up lever spring	1	
34	2301L00	KL230010	Take up lever spring screw	1	
35	2317L00	KL230170	Oil core bracket	1	
36			Hex. socket set screw M5×6		
37	2350F	KF230500	Take up lever roller assy	1	
38			Hex. nut 7/32		
39	2307L00	KL230070	Take up lever (SRE-7)	1	
	2308L00	KL230080	Take up lever (SRE-5)	1	
40	2358F	KF230580	Ceramic thread guide SRE (7)	N×1	
41	2319L00	KL230190	Take up lever assy SRE (7)	1	
	2320L00	KL230200	Take up lever assy SRE (5)	1	
42	2301F	KF230010	Needle bar assy	N×1	
43	2318F	KF230180	Needle bar spring	N×1	

③ Needle bar ▪ Take up lever mechanism (※ change the PARTS No. by machine type) (N=needle Q'ty)

ITEM	PART No.	LIST No.	DESCRIPTION	Q'TY	REMARK
44	2302G	KG230020	Presser foot	N×1	
45	2321F	KF230210	Needle bar spring	N×1	
46	2392F	KF230920	O-ring (L)	N×3	
47	2391F	KF230910	O-ring (S)	N×1	
48	2393F	KF230930	Specer	N×1	
49	2323F	KF230230	Needle clamp	N×1	
50	2324F	KF230240	Needle clamp screw (SM9/64)	N×1	
51	2325F	KF230250	Needle (DB K5 11)	N×1	
52	2313L00	KL230130	Driver shaft lower metal	1	
53	2311L00	KL230110	Turret plate felt (SRE-7)	1	
	2312L00	KL230120	Turret plate felt (SRE-5)	1	
54	2305L00	KL230050	Turret plate (SRE-US)	1	
55	23D4P00	HP231340	Turret plate joint pin	1	
56	3331C	KC330310380	Turret plate connecting rod L-250	1	※
57			Hex. nut M5		
58	91205	A9012005	Uni ball joint NMBRD4-020N (First head)	1	(First head)
	91203	A9012003	Uni ball joint NMBRD4-020L (Final head)	1	(Final head)
59	2315F	KF230150	Needle bar cap	N×1	
60	2321L00	KL230210	Turret plate assy SRE (7)	1	
	2322L00	KL230220	Turret plate assy SRE (5)	1	

④ Jamp mechanism (5•7)

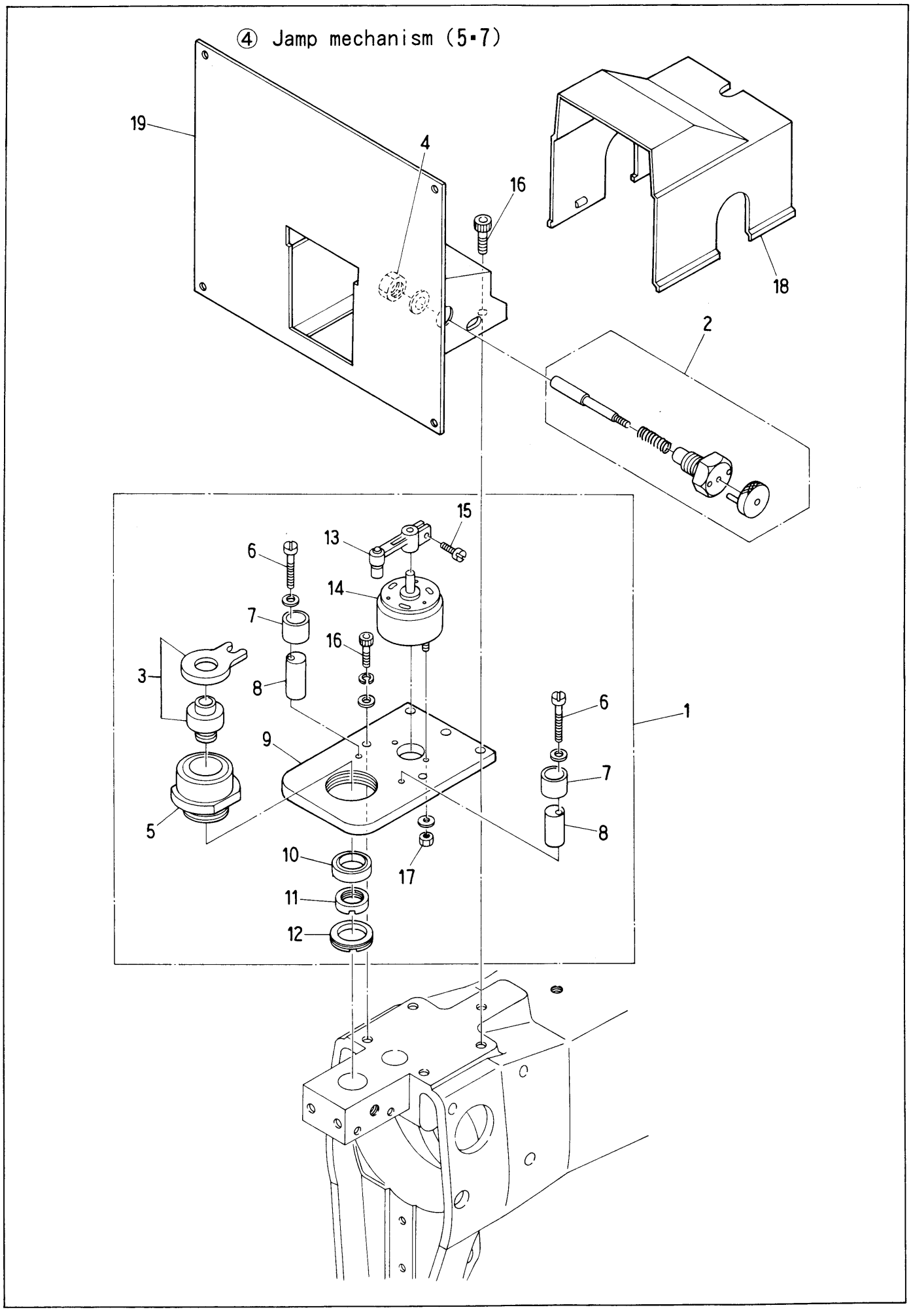

④ Jamp mechanism (5・7)

ITEM	PART No.	LIST No.	DESCRIPTION	Q'TY	REMARK
1	2402P00	HP240020	Jamping set (BESRH)	1	
2	2403F	KF240030	Canceling pin assy	1	
3	2420F00	KF240200	Rotor lever set	1	
4			Hex. nut M12		
5	2445F	KF240450	Rotor case	1	
6			Screw M4×25		
7	2449F	KF240490	Stopper eccentrie cover	2	
8	2448F	KF240480	Stopper eccentrie	2	
9	23D3P00	HP231330	Solenoid base	1	
10	91009	A9010009	Bearing (SSA-2015H)	1	
11	2447F	KF240470	Ring nut (S)	1	
12	2446F	KF240460	Ring nut (L)	1	
13	2442F	KF240420	Rotor Lever	1	
14	2461F	KF240610	Rotary solenoid (3ER25-35)	1	
15			Screw (SM9/64 40×8)		
16			Hex. socket belt M5X15		
17			Hex. nut M3		
18	24C1P00	HP241210	Tension cable cover	1	
19	24B3P00	HP241130	Tension base (5)	1	
	24B4P00	HP241140	Tension base (7)	1	

⑤ Thread guide mechanism (5) I

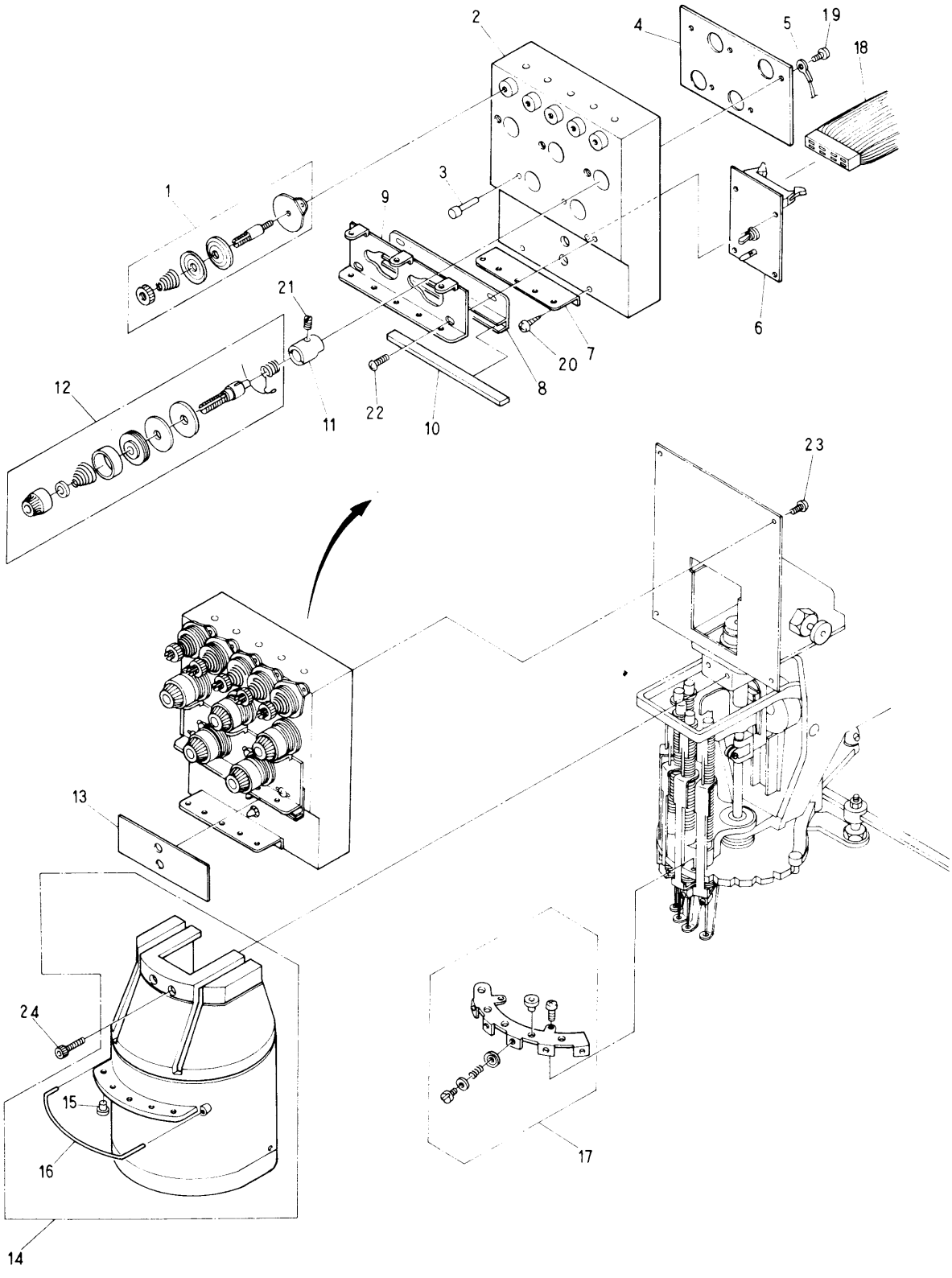

⑤ Thread guide mechanism (5) I (※Change the PART NO. by machine type)

ITEM	PART No.	LIST No.	DESCRIPTION	Q'TY	REMARK
1	24A2G	KG241020	Upper tension unit complete US	5	
2	24B1P00	HP241110	Tension base (5)	1	
3	24B6P00	HP241160	Upper thread detection pin	5	
4	24D7P01	HP241371	Tension earth plate (5)	1	
5	24D9P00	HP241390	Tension earth cable	1	
6	55C0150	EBY00150	3720 Head board	1	
7	24B9P00	HP241190	Second thread guide plate (5)	1	
8	24E5P00	HP241450	Thread guide felt fixing plate (5)	1	
9	24B7P00	HP241170	First thread guide (5)	1	
10	24E7P00	HP241470	Thread guide felt (5)	1	
11	24B5P00	HP241150	Tension base (with screw)	5	
12	24E1P00	HP241410	Dial type tension unit complete	5	
13	24E0P00	HP241400	Tension base label	1	
14	2500L00	KL250010	Sewing head cover (5)	1	
15	2493F01	KF240931	Thread guide φ11 (Alumina)	5	
16	2558P01	HP250581	Sewing head cover thread guide	1	
17	2505P00	HP250050	Thread end trap assy (UF)	1	
18	5140C	KN51040012300	Flat cable SR-12 P300	1	※
19			Pan screw M3×4		
20			Tapping screw M3.5×8		
21			Set screw (SM11/64 40×5.5)		
22			Truss screw M4×6		
23			Pan screw M4×10		
24			Hex. socket bolt M5×10		

⑤ Thread guide mechanism (7) II

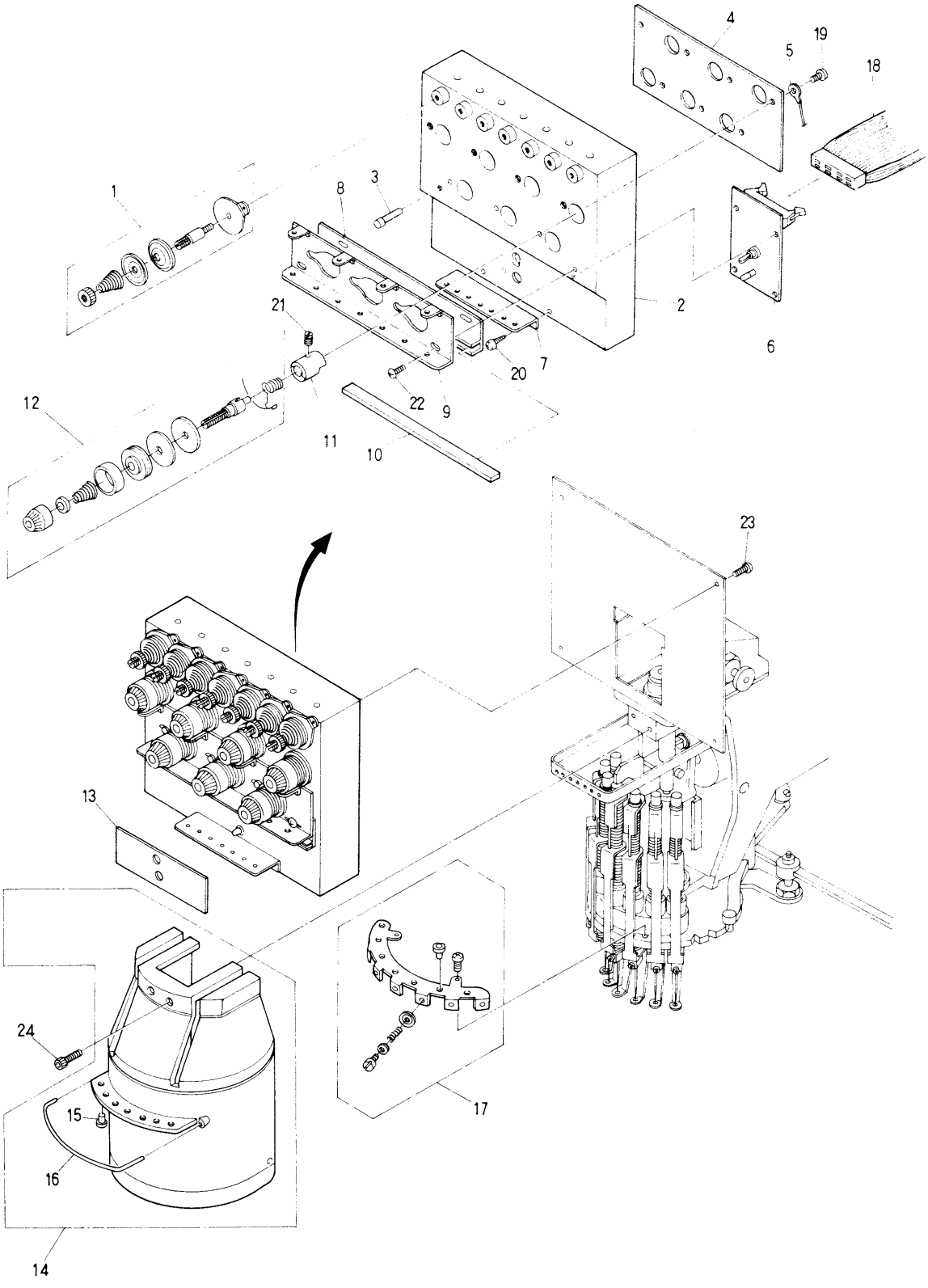

⑤ Thread guide mechanism (7) Ⅱ (※Change the PART NO. by machine type)

ITEM	PART No.	LIST No.	DESCRIPTION	Q'TY	REMARK
1	24A2G	KG241020	Upper tension unit complete US	7	
2	24B2P00	HP241120	Tension base (7)	1	
3	24B6P00	HP241160	Upper thread detection pin	7	
4	24D8P01	HP241381	Tension earth plate (7)	1	
5	24D9P00	HP241371	Tension earth cable	1	
6	55C0150	EBY00150	3720 Head board	1	
7	24C0P00	HP241200	Second thread guide plate (7)	1	
8	24E6P00	HP241460	Thread guide felt fixing plate (7)	1	
9	24B8P00	HP241180	First thread guide (7)	1	
10	24E8P00	HP241480	Thread guide felt (7)	1	
11	24B5P00	HP241150	Tension base (with screw)	7	
12	24E1P00	HP241410	Dial type tension unit complete	7	
13	24E0P00	HP241400	Tension base label	1	
14	2500L00	KL250000	Sewing head cover (7)	1	
15	2493F01	KF240931	Thread guide φ11 (Alumina)	7	
16	2558P01	HP250581	Sewing head cover thread guide	1	
17	2501G	KG250010	Thread end trap assy (US)	1	
18	5140C	KN51040012300	Flat cable SR-12 P300	1	※
19			Pan screw M3×4		
20			Tapping screw M3.5×8		
21			Set screw (SM11/64 40×5.5)		
22			Truss screw M4×6		
23			Pan screw M4×10		
24			Hex. socket bolt M5×10		

⑥ Drive mechanism

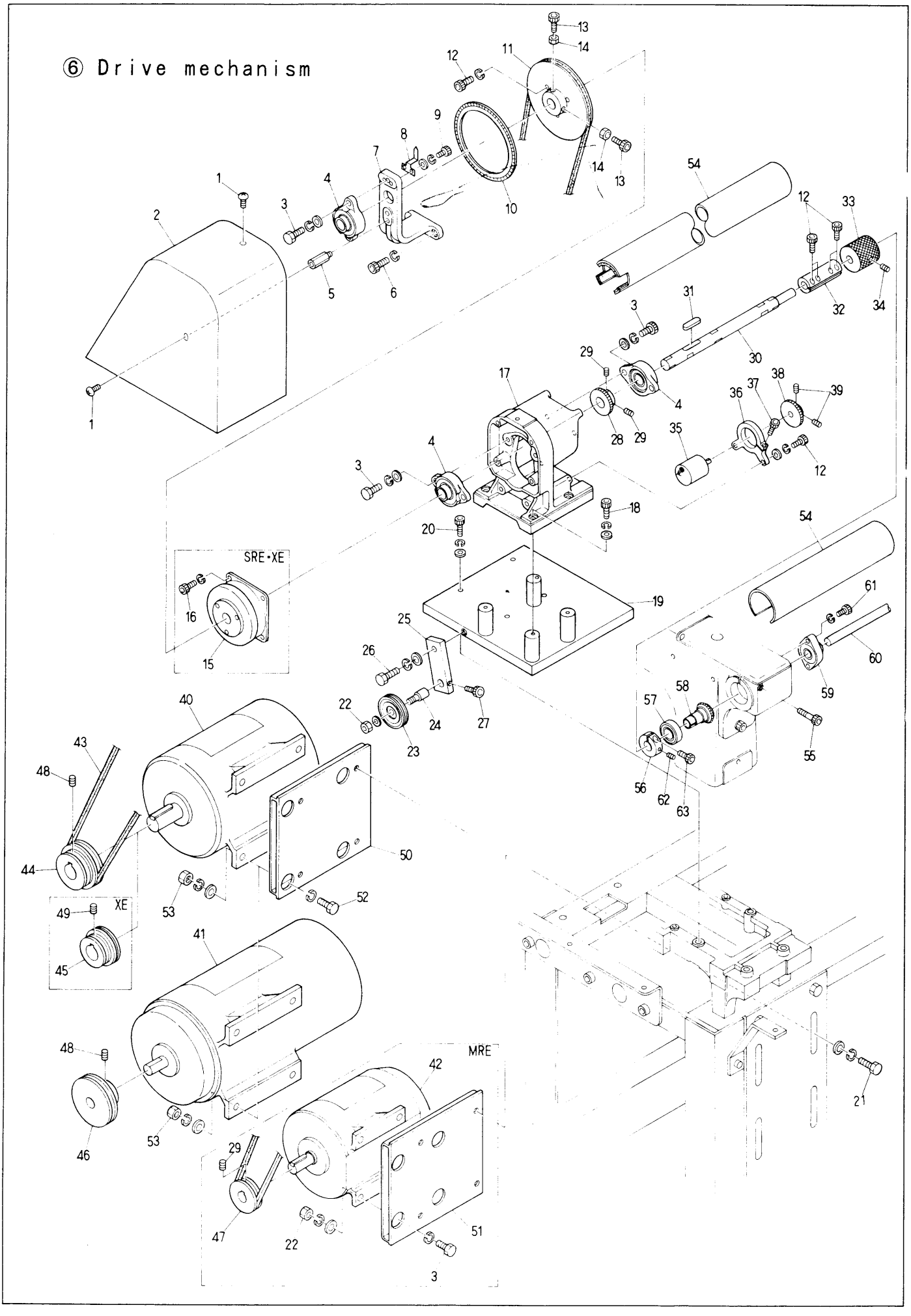

⑥ Drive mechanism

ITEM	PART No.	LIST No.	DESCRIPTION	Q'TY	REMARK
1			Pan screw M4×8		
2	3101L00	KL310010	Belt cover	1	
3			Hex. bolt M8×25		
4	91117	A9011017	Bearing unit BLF 204 (FYH)	3	
5	31T4N00	HP312940	Belt cover stay	1	
6			Hex. socket bolt		
7	31FXN00	KN315130	Brake box bearing support	1	
8	31EDP00	HP314670	Angle gauge	1	
9			Hex. socket bolt M4×8		
10	31AHN00	KN313670	Angle label (A)	1	
11	31S5C01	KC312851	Driving pulley	1	
12			Hex. socket bolt M6×20		
13			Hex. socket bolt M6×14		
14			Hex. nut M6		
15	31S0C	KC312800	Brake unit	1	
16			Hex. socket bolt M5×12		
17	31S1N00	KN312810	Brake box	1	
18			Hex socket bolt M6×35		
19	3105L01	KL310051	Brake box base	1	
20			Hex. socket bolt M6×50		
21			Hex. bolt M6×25		
22			Hex. nut M8		
23	31Y8P00	HP313480	NBK V-Idler (TPMV-64)	1	
24	31Y3P01	HP313430	Belt tension shaft 15×3.55L	1	
25	3104L00	KL310040	Idler stay	1	
26			Hex. bolt M12×35		
27			Hex. socket bolt N6×12		
28	31T1C01	KC312911	Encorder driving gear No.1	1	
29			Hex. socket set screw M5×8		
30	31S2N00	KN312820	Brake shaft	1	
31	3121W00	WW310210	Key 6×6×35	1	
32	3255H	HH320550	Upper shaft connecting coupling	1	
33	3259C	KC320590	Hand pulley	1	
34			Hex. socket set screw M6×12		
35	51A2N00	KN511020	Position corder 051 (for Enbroidery machine)	1	
36	31S9C	KC312890	Encorder retainer	1	
37			Truss screw M4×15		
38	31T2C01	KC312921	Encorder driving gear No.2	1	
39			Hex. socket set screw M4×8		
40	3111C	KC310110	Three-phase Motor (IKS-4P-0.4KW-DBK8)	1	(SRE,XE 3-phase)
41	3112C	KC310120	Single-phase Motor (FUJI PS401)	1	(SRE,XE 1-phase)
42	31FVN00	KN315110	Motor (IK-FBK8-4P-0.55KW VF3 200V)	1	(MRE motor)
43	92066	A9020066	V-belt 3V-560	1	
44	31Y0P01	HP313401	Motor pulley (5R-3P-50/60HZ)	1	(SRE 3-phase)
45	31S3C01	KC312831	Motor pulley (3P-50/60HZ)	1	(XE 3-phase)

⑥ Drive mechanism

(※ Change the PART NO. by machine)

ITEM	PART No.	LIST No.	DESCRIPTION	Q'TY	REMARK
46	31DYN00	KN314620	Motor pulley (1P-50HZ)	1	(SRE,XE 1-phase)
	31DXN00	KN314610	Motor pulley (1P-60HZ)	1	(SRE,XE 1-phase)
	31DWY00	KN314600	Motor pulley (1P-60HZ)	1	(SRE,XE 1-phase)
	31DVY00	KN314590	Motor pulley (1P-50HZ)	1	(SRE,XE 1-phase)
47	31DZP01	HP314631	Motor pulley (BEMRH、0.55KW)	1	(MRE 1-phase)
48			Hex. socket set screw M6×20		
49			Hex. socket set screw M6×6		
50	3102L00	KL310020	Motor fixing bracket (SRE、XE)		
51	3103L00	KL310030	Motor fixing bracket (MRE)		
52			Hex. bolt M10×35		
53			Hex. nut M10		
54	3800080	1PL12380480	Connecting shaft cover set (SRE-12 380/480)	1	※
55			Hex. socket bolt M6×60		
56	3202L00	KL320020	Connecting gear clamp φ19	1	
57	91017	A9010017	Bearing 6004ZZ	1	
58	3200L00	KL320000	Connecting gear (Spiral bevel M1.5-25L)	1	
59	32B4P00	HP321140	Upper connecting shaft bearing unit	1	
60	3282C00	KC320820	Top shaft Connecting shaft 15×5500	2	
61			Hex. socket bolt M6×30		
62			Hex. socket set screw M6×10		
63			Hex. socket bolt M6×25		

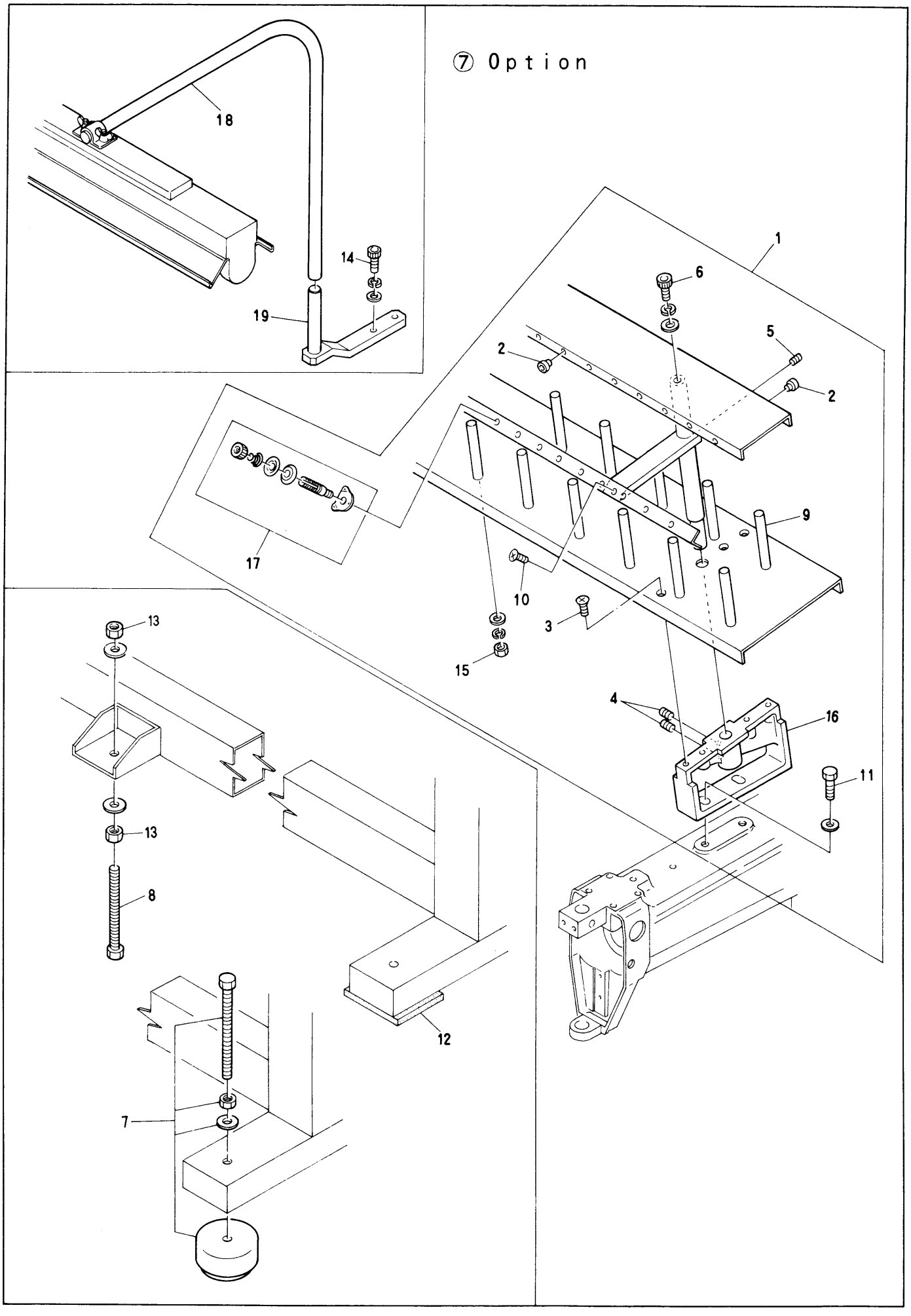
⑦ Option
18
14
19
1
6
5
2
2
9
17
10
3
15
13
4
16
11
13
8
12
7

⑦ Option (※Change the PART NO. by machine type) H=Head Q'ty

ITEM	PART No.	LIST No.	DESCRIPTION	Q'TY	REMARK
1	7A07PL0	1JP10430	Thread stand SRH-UF-12 P=300	1	※
2	2490F	KF240900	Thread guide ceramic (Thread stand)		
3			Flush screw M4×12		
4			Hex. socket set screw M5×8		
5			Hex. socket set screw M6×8		
6			Hex. socket bolt M6×15		
7	1290H	HH120900	Mount set 140×70	4	For export
8			Hex. socket bolt M16×130		
9	7128F	KF710280	Thread stand bar	H×9 H×6	
10			Flush screw M5×6		
11			Hex. bolt M8×20		
12	1197C	KC110970	Machine base pad P1012 (100×100)	4	For interior
13			Hex. nut M16		
14			Hex. socket bolt M8×45		
15			Hex. nut M5		
16	7179P00	HP710790	Thread stand base	4	
17	24A3G01	KG241031	Second thread stand tention unit complete US	H×9 H×6	
18	71C0P00	HP711200	Fluorescent lamp set LAP4113T-15/64LG	1	※
19	7116G01	KG710161	Fluorescent lamp stand base	3	

⑧ Color change mechanism

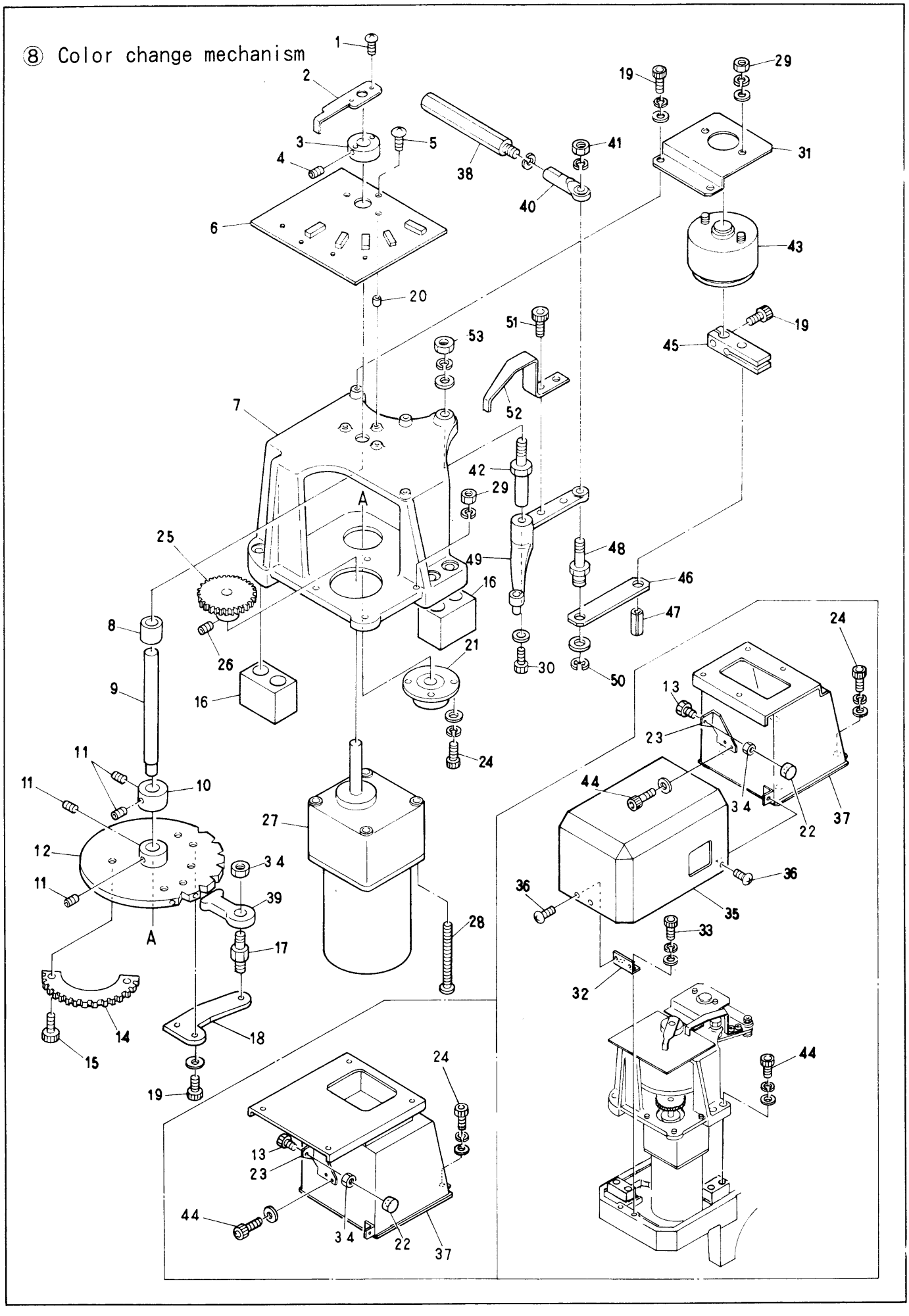

⑧ Color change mechanism

ITEM	PART No.	LIST No.	DESCRIPTION	Q'TY	REMARK
1			Flush screw M3×8		
2	3328C	KC330280	Detection plate	1	
3	3317C	KC330170	Plate collar	1	
4			Hex. socket set screw M5×10		
5			Flush screw M3×12		
6	55C0180	EBY00180	3740 Needle positioner (US)	1	
7	3313C	KC330130	Needle turning unit base	1	
8	3319C	KC330190	Oil-less metal	1	
9	3316C	KC330160	Needle turning shaft	1	
10	3318C	KC330180	Collar φ10	1	
11			Hex. socket set screw M5×6		
12	3315G	KG330150	US Control turning plate	1	
13			Hex. socket bolt M5×30		
14	3322G	KG330220	Needle turning gear No.2	1	
15			Hex. socket bolt M5×12		
16	3305L00	KL330050	Unit base speser	2	
17	2336F	KF230360	Turret plate joint pin	1	
18	3304L00	KL330040	Turret plate lever	1	
19			Hex. socket bolt M5×15		
20	912K3	A9012203	Specer 4×4	3	
21	3361C	KC330610	Oil-less bearing (OCHIAI) S/S LSB-G8-08V	1	
22	2315F	KF230150	Needle bar cap	1	
23	3302L00	KL330020	Lock lever stopper		
24			Hex. socket bolt M6×12		
25	3321C	KC330210	Needle turning gear No.1 (0.8M50T)	1	
26			Hex. socket set screw M4×8		
27	3381C	KC330810	Geard motor RM-F6A5PC3-AS-120	1	
28			Flush screw M4×65		
29			Hex. nut M4		
30			Hex. socket bolt M5×12		
31	3326C	KC330260	Bracket lock rotary solenoid	1	
32	3391C	KC330910	Cover bracket	1	
33			Hex. socket bolt M5×10		
34			Hex. nut M5		
35	3301L00	KL330010	Cover	1	
36			Truss screw M4×8		
37	33K1N00	KN332010	Automat base (BEMRE)	1	
	3312N01	KN330121	Automat base (BESRE, XE)	1	
38	3351C	KC330510	Hex. connecting bar (L)	1	
39	91201	A9012001	Uniball joint (NMB RD4020R)	1	
40	91202	A9012002	Uniball joint (NMB PR-6)	1	
41			Hex. nut M16		
42	2363F	KF230630	Lock lever shaft	1	
43	3385C	KC330850	Rotary solenoid 6SR-25 (27×4×9)	1	
44			Hex. socket bolt M6×30		

⑧ Color change mechanism

ITEM	PART No.	LIST No.	DESCRIPTION	Q'TY	REMARK
45	3324Y00	KN330240	Lock solenoid lever	1	
46	3325Y00	KN330250	Lock lever link	1	
47	912E3	A9012143	Spring pin φ6 L=12	1	
48	3323C	KC330230	Lock lever pin	1	
49	2361G	KG230610	US lock lever	1	
50	912D7	A9012137	Snap ring φ8	1	
51			Hex. socket bolt M4×8		
52	3329C	KC330290	Lock detection plate HJ	1	
53			Hex. nut M8		

⑨ Pantograph drive mechanism (V ▪ H-Direction) Ⅰ－①

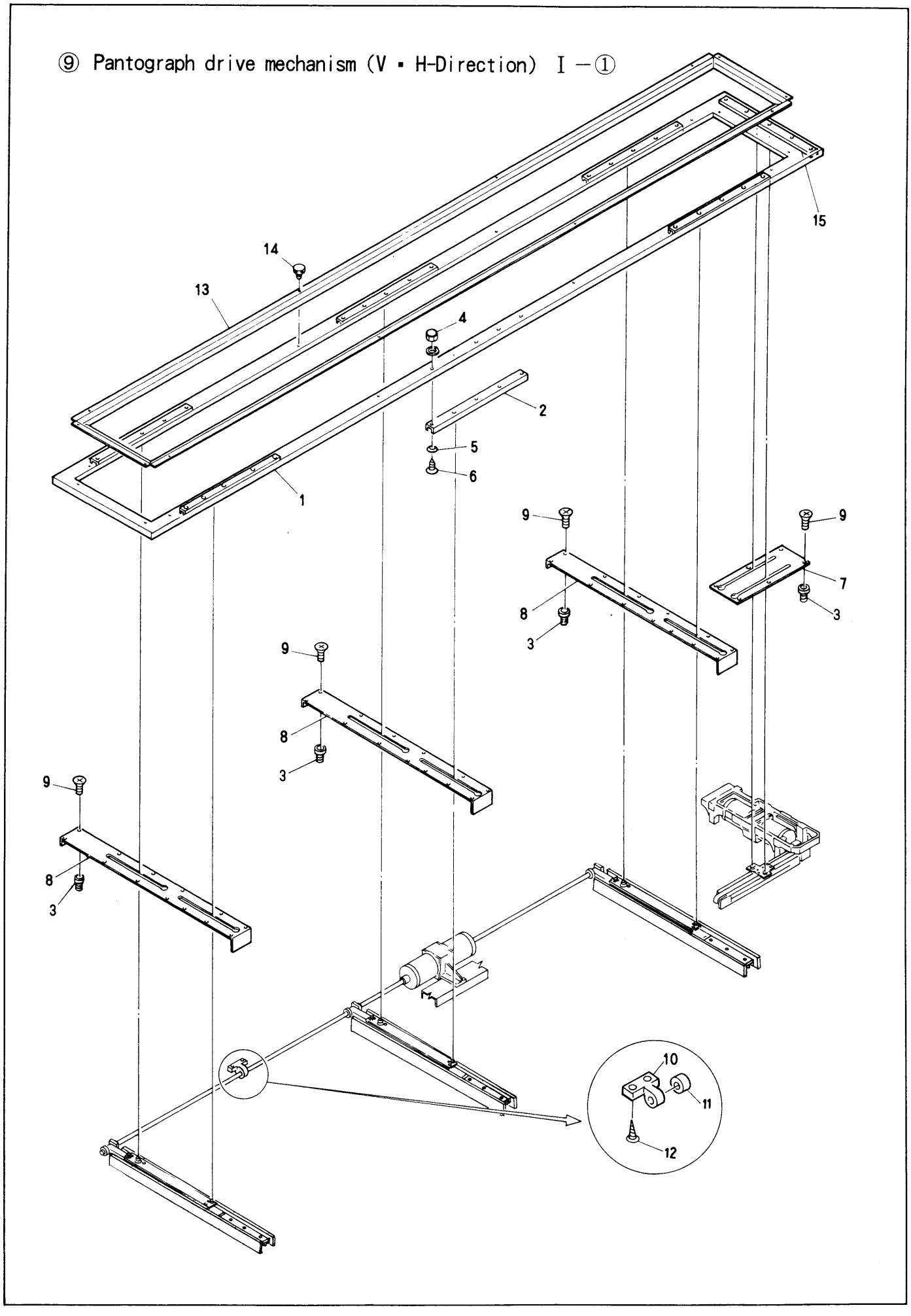

⑨ Pantograph drive mechanism (V・H-Direction) Ⅰ－① (※Change the PART NO. by machine type)

ITEM	PART No.	LIST No.	DESCRIPTION	Q'TY	REMARK
1	4573C	KC450730	Pantograph frame assy (HJ-12 320×300)	1	※
2	4840N00	KN480400	Guide rail B (470L)	6	※
3			Nut M4		
4			Cap nut M4		
5			Washer (with gear) 4		
6			Flush screw M4×12		
7	4819C	KC480190	V guide cover (480)	1	※
8	4806C	KC481260	H center guide cover (JM-C)	3	
9			Flush screw M4×8		
10	4708H	HH470080	Pulse motor connecting shaft support	1	
11	91128	A9011028	DU bush (MB1510DU)	1	
12			Flash wood screw 5.1×25		
13	7380C	1LKC450020	Frame SR-12 320×300	1	※
14	7379F	KF730790	Knurling screw	36	
15	4835C	KC480350	Guide rail (470L)	1	

⑨ Pantograph drive mechanism (V ▪ H-Direction) Ⅰ－②

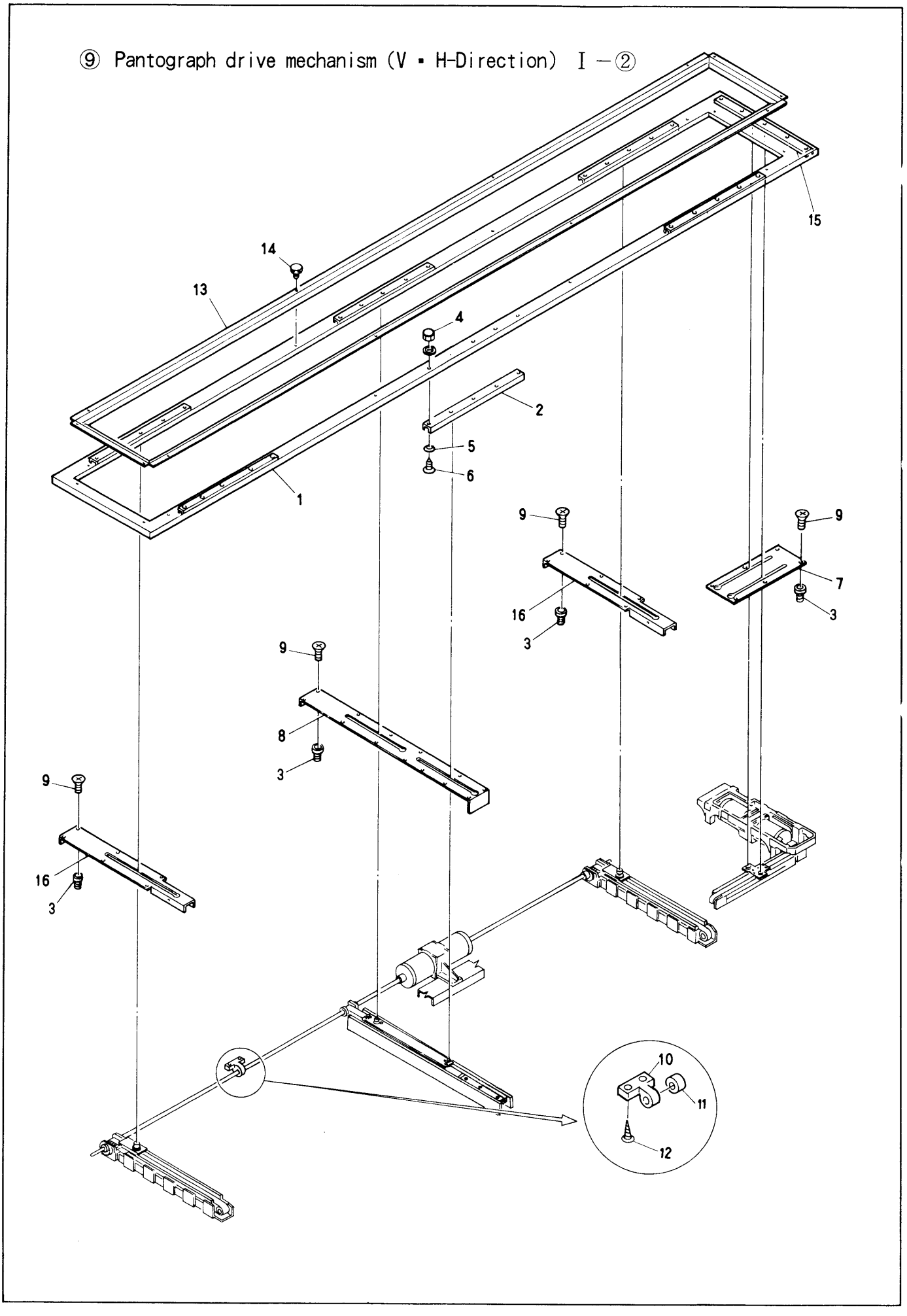

⑨ Pantograph drive mechanism (V・H-Direction) Ⅰ－② (※Change the PART NO. by machine type)

ITEM	PART No.	LIST No.	DESCRIPTION	Q'TY	REMARK
1	4573C	KC450730	Pantograph frame assy (HJ-12 320×300)	1	※
2	4840N00	KN480400	Guide rail B (470L)	6	※
3			Nut M4		
4			Cap nut M4		
5			Washer (with gear) 4		
6			Flush screw M4×12		
7	48Q0N00	KN482600	V guide cover (600)	1	※
8	48C6C	KC481260	H center guide cover (JM-C)	1	
9			Flush screw M4×8		
10	4708H	HH470080	Pulse motor connecting shaft support	1	
11	91128	A9011028	DU bush (MB1510DU)	1	
12			Flash wood screw 5.1×25		
13	7380C	1LKC450020	Frame SR-12 320×300	1	※
14	7379F	KF730790	Knurling screw	36	
15	4835C	KC480350	Guide rail (470L)	1	
16	48C5C	KC481250	H guide cover (JM-2)	2	

⑩ Pantograph drive mechanism (H) II

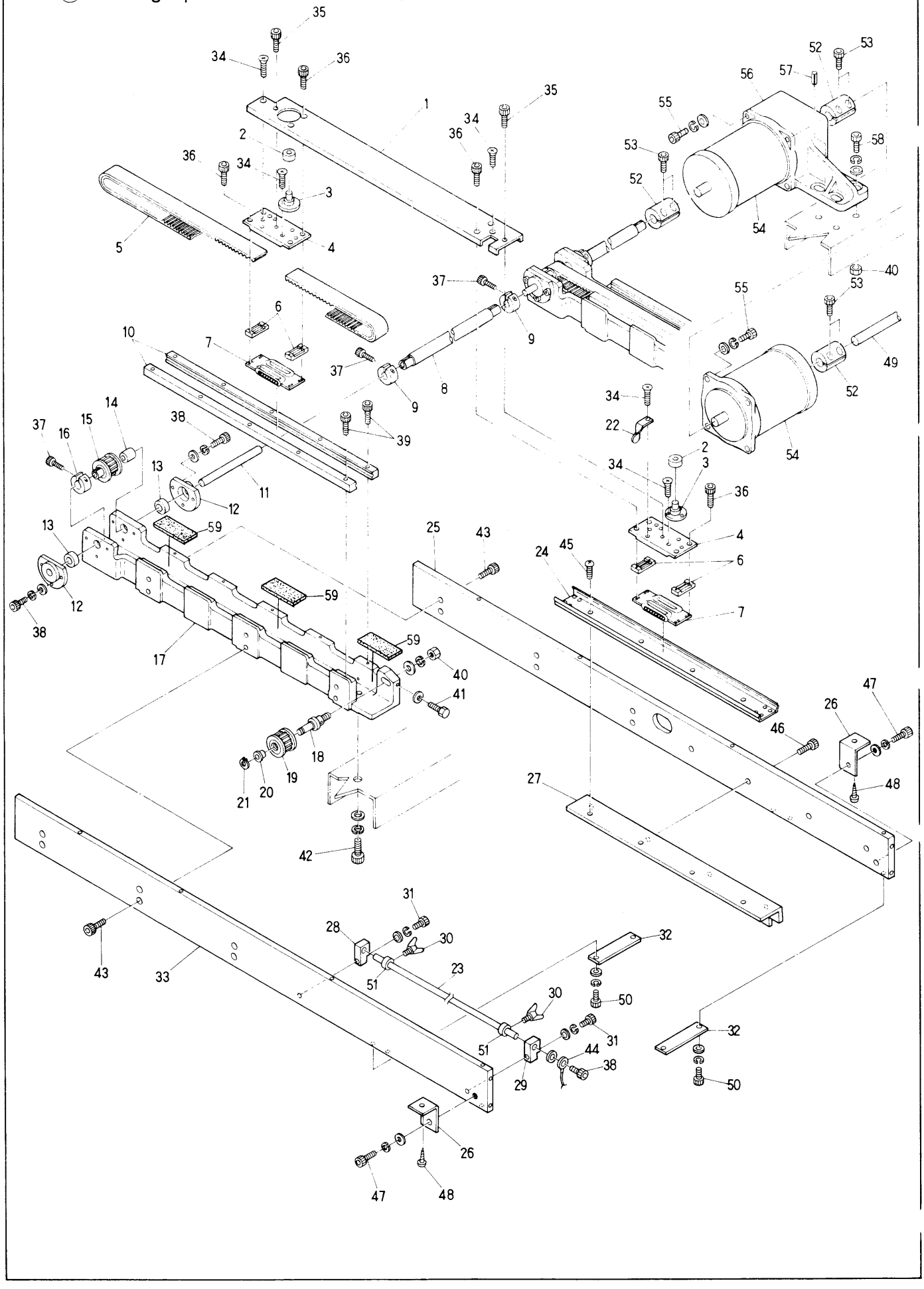

⑩ Pantograph drive mechanism (H) Ⅱ

ITEM	PART No.	LIST No.	DESCRIPTION	Q'TY	REMARK
1	4824C	KC480240	H menber connectins channel HJ	1	
2	91006	A9010006	Bearing (625zz)(1650)	2	
3	4826C	KC480260	Bearing shaft	2	
4	4821C	KC480210	H slide pack base	2	
5	48A3H	HH481030	Timming belt T5-20-243	1	
6	4765C	KC470650	Timming belt rack	4	
7	4831H	HH480310	Slide pack (FBW3590)	2	
8	4920N00	KN490200	H pulse motor connecting shaft set (BESR-12,P=380)	1	
9	4718H	HH470180	clamp (φ12)	4	
10	4833C	KC480330	V guide rail S55C (430L)	2	
11	4764C	KC470640	Timming belt shaft(150L)	1	
	4759C	KC470590	Timming belt shaft(130L)	2	
12	4769N00	KN470690	Bearing husing	2	
13	91101	A9011001	Bearing (JBS 108)	2	
14	4762C	KC470620	Timming pulley adjust collar	1	
15	4752C	KC470520	Timming pulley (ML－3208－T5-16T)	1	
16	4719C	KC470190	Clamp (φ13)	1	
17	4879N00	KN480790	H center guide rail base	1	
18	4827C	KC480270	Timming pulley shaft (Front)	1	
19	4754C	KC470540	Timming pulley	1	
20	4841H	HH480410	Timming pulley shaft bush	1	
21	91252	A9012052	E-Ring (φ10)	1	
22	4596C	KC450960	Pantograph stop sensor plate (H)	1	
23	4548C	KC450480	Pantograph stop bar	1	
24	4832C	KC480320	Slide pack guide rail (400L)	1	
25	48C3C	KC481230	H center guide cover R (JRC)	1	
26	1463C	KC140630	Table adjust plate No.2	2	
27	48C4C	KC481240	H center guide rail base (JM-C)	1	
28	4518C	KC450180	Pantograph bar fixing base (R)	1	
29	4519C	KC450190	Pantograph bar fixing base (L)	1	
30			Butterfly bolt M5×15	2	
31			Hex. socket bolt M4×25		
32	48C8C01	KU481281	H center guide	2	
33	48D6C	KC481360	H center guide side cover (L)	1	
34			Screw M4×6		
35			Hex. socket bolt M4×8		
36			Hex. socket bolt M3×12		
37			Hex. socket bolt M5×15		
38			Hex. socket bolt M4×20		
39			Hex. socket bolt M4×15		
40			Hex. nut M8		
41			Hex. bolt M4×25		
42			Hex. socket bolt M8×20		
43			Hex. socket bolt M6×18		
44	95333	A9053033	Pantograph stopping single cable 0.75×180	1	

⑩ Pantograph drive mechanism (H) Ⅱ

ITEM	PART No.	LIST No.	DESCRIPTION	Q'TY	REMARK
45			Truss screw M4×10		
46			Hex. socket bolt M4×10		
47			Hex. socket bolt M6×20		
48			Wood screw 5.1×25		
49			Pulse motor connecting shaft	1	
50			Hex. socket bolt M4×15		
51	4547C	KC450470	Pantograph stop collar	2	
52	48J3H01	HH481931	Pulse motor coupling	3	
53			Hex. socket bolt M5×18		
54	48J0H	HH481900	Pulse motor (4M)	2	
55			Hex. socket bolt M6×25		
56	4715N01	KN470151	H Pulse motor bracket	1	
57			Roll pin 4×30	2	
58			Hex. socket bolt M8×40		
59	4806N01	KN480061	Rail base felt 100×38×6	3	

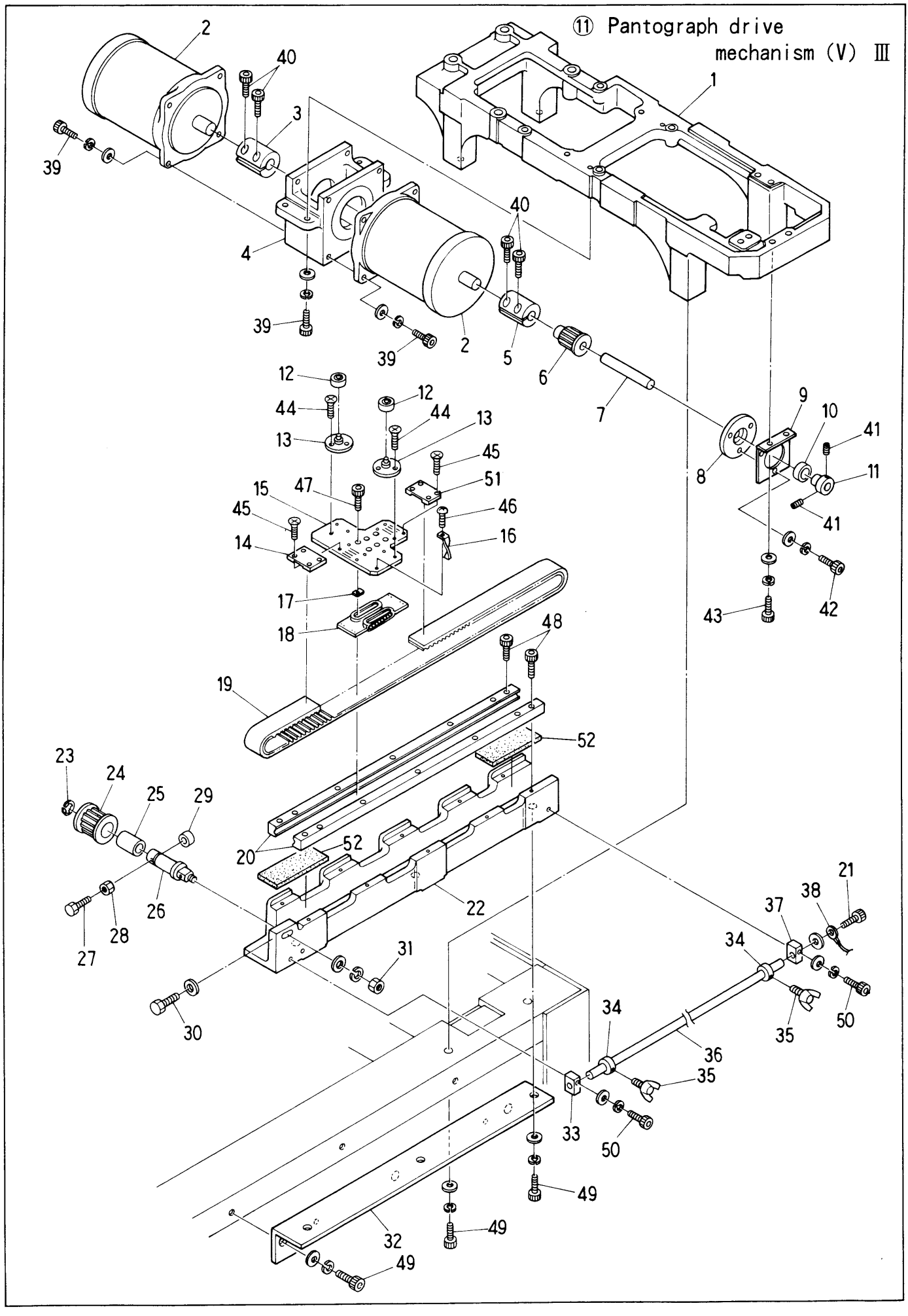
⑪ Pantograph drive mechanism (V) Ⅲ
1
2
3
4
5
6
7
8
9
10
11
12
13
14
15
16
17
18
19
20
21
22
23
24
25
26
27
28
29
30
31
32
33
34
35
36
37
38
39
40
41
42
43
44
45
46
47
48
49
50
51
52

⑪ Pantograph drive mechanism (V) Ⅲ (※Change the PART NO. by machine type)

ITEM	PART No.	LIST No.	DESCRIPTION	Q'TY	REMARK
1	3311N00	KN330110	Control unit base	1	
2	48J0H	HH481900	Pulse motor (4M)	2	
3	48J3H01	HH481931	Pulse motor coupling	1	
4	4716N00	KN470160	Pulse motor bracket V	1	
5	4915N00	KN490150	Pulse motor coupling	1	
6	48T9P00	HP482990	Pantograph driving pulley (Rear) S5M	1	
7	4914N00	KN490140	V timing belt shaft	1	
8	4913N00	KN490130	V timing belt shaft bearing housing	1	
9	4912N00	KN490120	Bearing bracket	1	
10	91163	A9011063	Needle bearing TLA2016	1	
11	48J7H	HH481970	Pulse motor connecting shaft collar	1	
12	91006	A9010006	Bearing (625ZZ) (1650)	2	
13	4826C	KC480260	Bearing shaft	2	
14	4803N00	KN482630	V Timing fixing buckle No.1	1	
15	4823C02	KC480231	V-slide pack base	1	
16	4597C	KC450970	Pantograph stopping sensor plate (V)	1	
17	4838C	KC480380	Spacer (FBW 3590)	6	
18	4831H	HH480310	Slide pack (FBW 3590)	1	
19	92098	A9020098	Timing belt 300S5M2000	1	
20	4830H	HH480300	Guide rail (1060L)	2	
21			Hex. socket bolt M4×12		
22	4813C01	KC480131	V guide rail base (For V stroke 480)	1	※
23	91252	A9012052	E-ring	1	
24	48T8P00	HP482980	Pantograph driving pulley (Front) S5M	1	
25	91179	A9011079	Needle bearing TA-1225	1	
26	48J9H01	HH481991	Timing pulley shaft	1	
27			Hex. bolt M4×40		
28			Hex. nut M4		
29	48L1H	HH482110	Pulley shaft bolt cap	1	
30			Hex. bolt M4×25		
31			Hex. nut M8		
32	4746C	KC470460	V-guide rail base bracket	1	
33	4519C	KC450190	Pantograph stopping bar fixing base (L)	1	
34	4547C	KC450470	Pantograph stopping collar	2	
35			Butterfly bolt M5×15	2	
36	4548C	KC450480	Pantograph stopping bar	1	
37	4518C	KC450180	Pantograph stopping bar fixing base R	1	
38	95333	A9053033	Pantograph stopping single cable 0.75×180	1	
39			Hex. socket bolt M6×25		
40			Hex. socket bolt M5×28		
41			Hex. socket set screw M5×8		
42			Hex. socket bolt M4×8		
43			Hex. socket bolt M5×12		
44			Flush screw M4×6		
45			Flush screw M4×6		

⑪ Pantograph drive mechanism (V) Ⅲ

ITEM	PART No.	LIST No.	DESCRIPTION	Q'TY	REMARK
46			Truss screw M4×6	1	
47			Hex. socket bolt M3×8		
48			Hex. socket bolt M4×15		
49			Hex. socket bolt M8×20		
50			Hex. socket bolt M4×20		
51	4804N00	KN482640	Timing fixing buckle No.2	1	
52	4806N01	KN480061	Rail base felt 100×38×6	2	

⑫ Contorol system <BESRE>

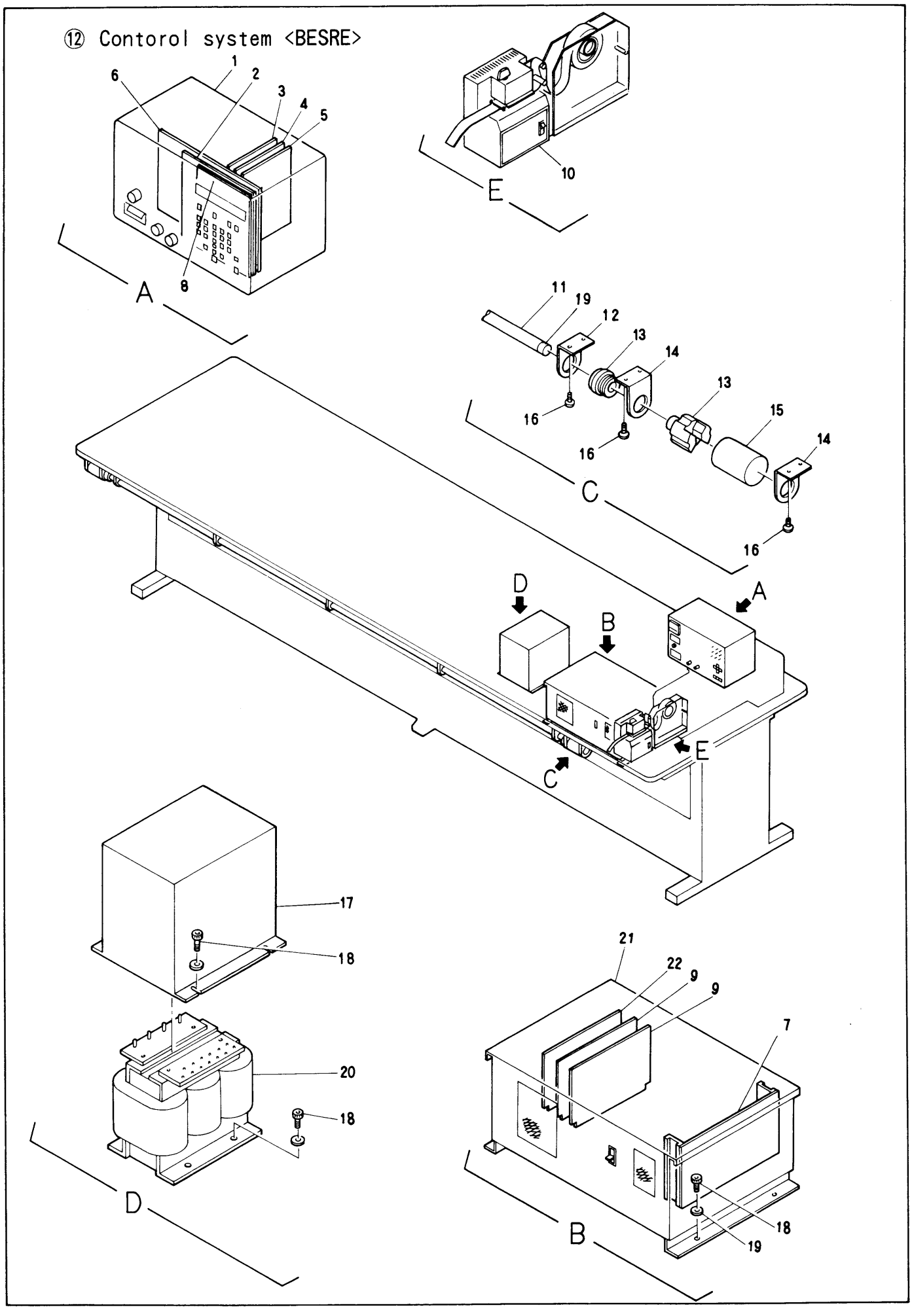

⑫ Control system <BESRE>

ITEM	PART No.	LIST No.	DESCRIPTION	Q'TY	REMARK
1	51J2CA1	EAY009A1	Automat controller (BESR)	1	
2	55C0190	EBY00190	3612 Display board	1	
3	55C0080	EBY00090	3435 Interface board J3 JR	1	
4	55C0050	EBY00060	3423A CPU board JR•SR	1	
5	55N0090	EBY00410	3404 IC memory board	1	
6	55N0060	EBY00310	3503 Back board	1	
7	55N0050	EBY00300	3590 Motor driving board 1P	1	
	55N0040	EBY00290	3490 Motor driving board 3P	1	
8	55N0070	EBY00320	FM20×1AA-D Word display unit	1	
9	55C0110	EBY00110	3470 Transistor board J3,J4	2	
10	5222C	KC520220	Tape reader PTR-5	1	
11	5316F	KF530160	Bar switch	2	
12	5324C00	KC530240	Bar switch bracket (S, for cylinder)	5	
13	5311F	KF530110	Push botton switch MS320 (Red)	1	
	5312F	KF530120	Push botton switch MS319 (Green)	1	
14	5323C00	KC530230	Bar switch bracket (L, for cylinder)	4	
15	5315F	KF530150	Push botton switch cap	2	
16			Screw M4×20		
17	5202C	KC520020	Transformer cover set	1	
18			Hex. socket bolt M6×30		
19	5317F	KF530170	Bar switch cap	2	
20	51J2CA3	EAY009A3	Automat transformer (SR) 3P	1	
	51L2CA3	EAY010A3	Automat transformer (SR) 1P	1	
21	51J2CA2	EAY009A2	Automat driver (SR) 3P	1	
	51L2CA2	EAY010A2	Automat driver (SR) 1P	1	
22	55C0070	EBY00080	3462 Driver control board	1	

⑫ Contorol system <BEMRE>

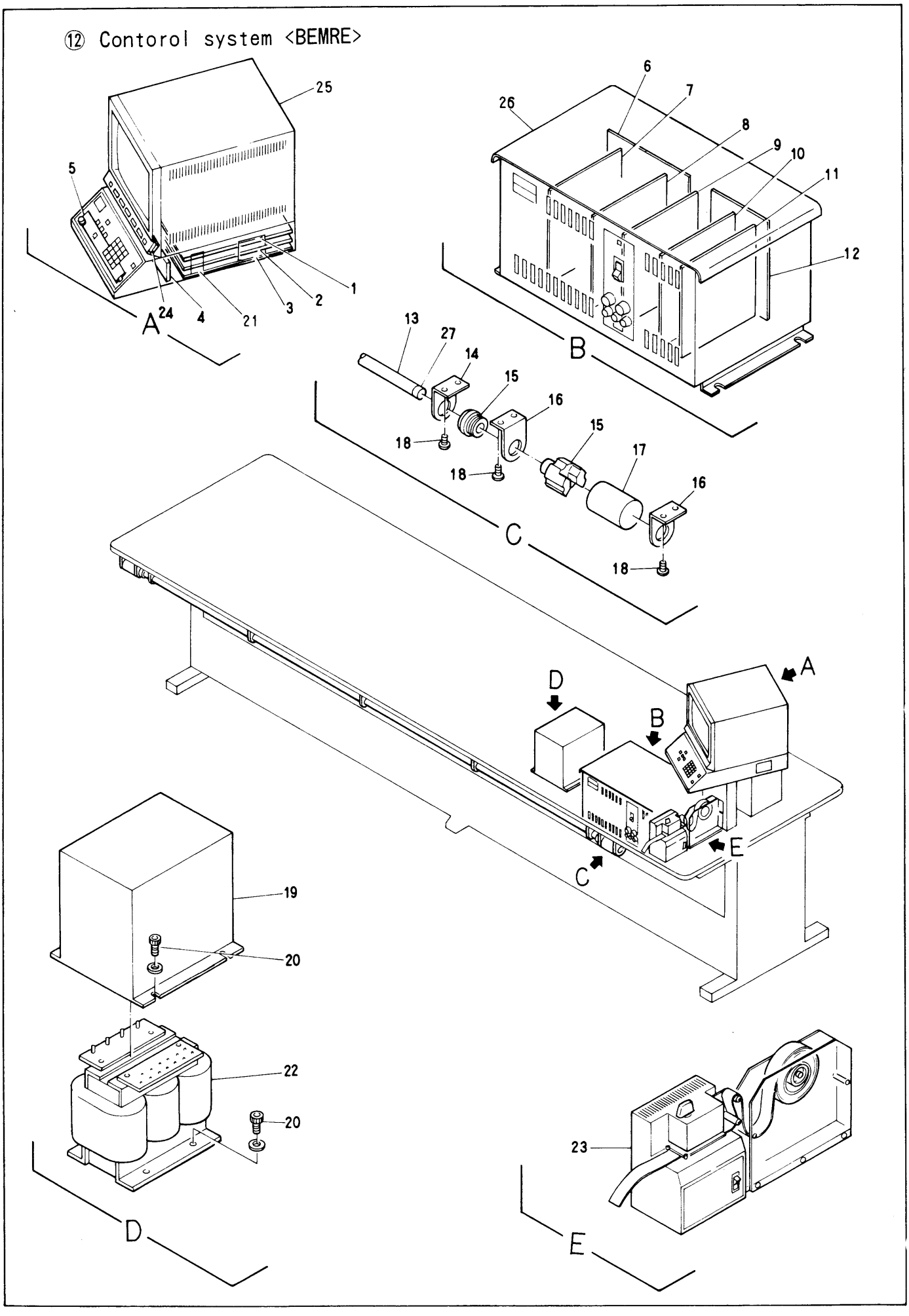

⑫ Control system <BEMRE>

ITEM	PART No.	LIST No.	DESCRIPTION	Q'TY	REMARK
1	55R0000	EBY00450	4410 CPU board	1	
2	55R0010	EBY00460	4420 Memory board	1	
3	55R0020	EBY00470	4430 FDSP board	1	
4	55R0030	EBY00480	4440 B/B board	1	
5	55R0040	EBY00490	4450 Buzzer board	1	
6	55R0120	EBY00570	4590 B/B,L board	1	
7	55R0090	EBY00540	4540 Pulse motor control board	1	
8	55R0080	EBY00530	4530 Inverter board	1	
9	55R0100	EBY00550	4560 Power control board	1	
10	55R0070	EBY00520	4520 Solenoid board	1	
11	55R0060	EBY00510	4510 Interface board	1	
12	55R0110	EBY00560	4580 B/B,R board	1	
13	5316F	KF530160	Bar switch	2	
14	5324C00	KC530240	Bar switch bracket (S, for cylinder)	5	
15	5311F	KF530110	Push botton switch MS320 (Red)	1	
	5312F	KF530120	Push botton switch MS319 (Green)	1	
16	5323C00	KF530230	Bar switch bracket (L, for cylinder)	4	
17	5315F	KF530150	Push botton switch cap	2	
18			Tapping screw M4×20		
19	5202C	KC520020	Transformer cover set	1	
20			Hex, socket bolt M6×30		
21	55R0140	EBY00630	Floppy disk drive FD-1137C	1	
22	51G4NA3	EAY018A3	Automat transformer (BEMR) 1P	1	
	51G3NA3	EAY017A3	Automat transformer (BEMR) 3P	1	
23	5222C	KC520220	Tape reader PTR-5	1	
24	55R0050	EBY0500	4460 Switch board	1	
25	51G3NA1	EAY017A1	Automat contoroler (BEMR)	1	
26	51G3NA2	EAY017A2	Automat driver (BEMR)	1	
27	5317F	KF530170	Bar switch cap	2	

⑫ Contorol system <BEXE>

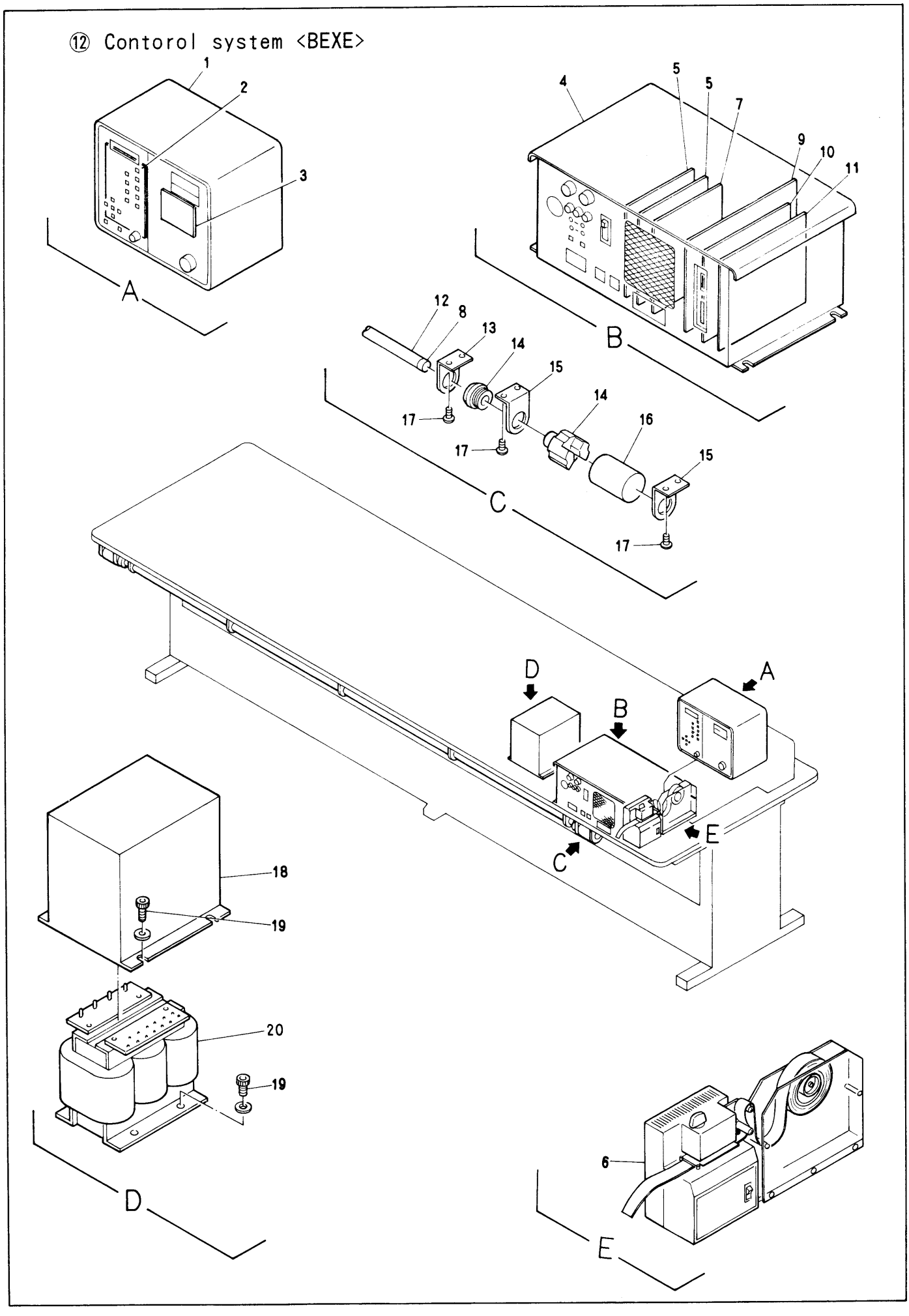

⑫ Control system <BEXE>

ITEM	PART No.	LIST No.	DESCRIPTION	Q'TY	REMARK
1	51J3CA1	EAY011A1	Automat controller (BEX)	1	
2	55Y0050	EBY00340	4050 Display board	1	
3	55Y0060	EBY00350	4050 Relay board	1	
4	51J3CA2	EAY011A2	Automat driver (BEX) 3P	1	
	51L3CA2	EAY012A2	Automat driver (BEX) 1P	1	
5	55C0110	EBY00110	3470 Transistor board J3, J4	2	
6	5222C	KC020220	Tape reader PTR-5	1	
7	55C0070	EBY00080	3462 Driver control board	1	
8	5317F	KF530170	Bar switch cap	2	
9	55Y0020	EBY00260	404X Motor driving board (BEX) 3P	1	
	55Y0100	EBY00640	404X Motor driving board (BEX) 1P	1	
10	55Y0030	EBY00270	403X Interface board	1	
11	55N0130	EBY00590	4022 CPU board (BEX)	1	
12	5316F	KF530160	Bar switch	2	
13	5324C00	KC530240	Bar switch bracket (S. for cylinder)	5	
14	5311F	KF530110	Push botton switch MS320 (Red)	1	
	5312F	KF530120	Push botton switch MS319 (Green)	1	
15	5323C00	KC530230	Bar switch bracket (L. for cylinder)	4	
16	5315F	KF530150	Push botton switch cap	2	
17			Tapping screw M4×20		
18	5202C	KC520020	Transformer cover set	1	
19			Hex. socket bolt M6×30		
20	51J3CA3	EAY011A3	Automat transformer (X) 3P	1	
	51L3CA3	EAY012A3	Automat transformer (X) 1P	1	

⑬ Under thread cut sensorium mechanism I

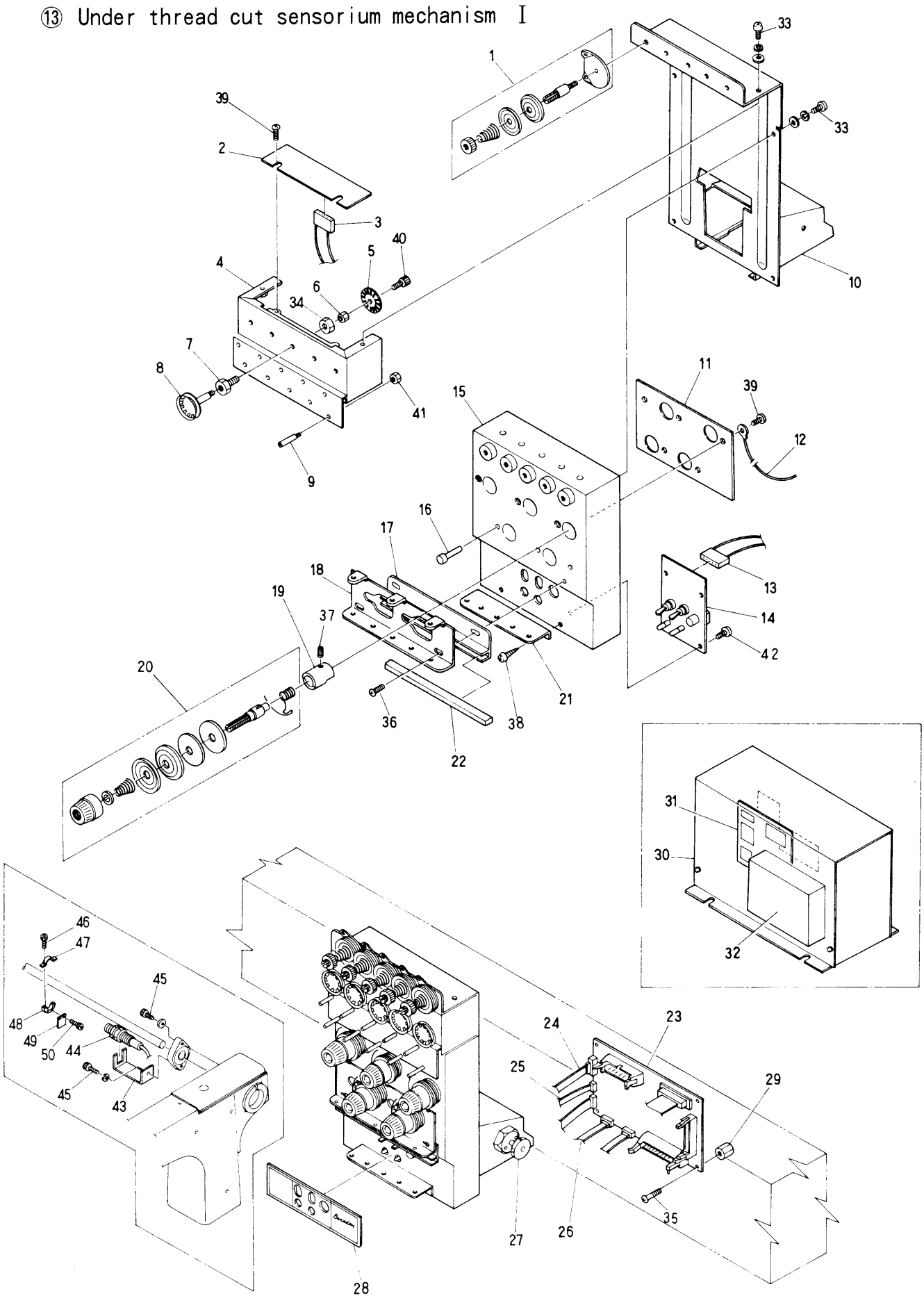

⑬ Under thread cut sensorium mechanism I

ITEM	PART No.	LIST No.	DESCRIPTION	Q'TY	REMARK
1	24A3G	KG241030	Upper tension unit complete US	5	
2	5463N00	KN540630	P.C board BAP-302-5 (5)	1	
3	5471N00	KN540710	Sensor cable 2	1	
4	5453N00	KN540530	Lower thread sensorium box (5)	1	
5	5452N00	KN540520	Lower thread sensorium sensor disk	5	
6	5451N00	KN540510	Tension wheel nut M2	5	
7	5461N00	KN540610	Wheel shaft metal	5	
8	5450N00	KN540500	Tension wheel shaft assy	5	
9	5459N00	KN540590	Thread guide pin	10	
10	5455N00	KN540550	Tension base (5)	1	
11	24D7P01	HP241371	Tension earth plate	1	
12	24D9P00	HP241390	Tension earth cable	1	
13	5472N00	KN540720	Switch cable 3	1	
14	5465N00	KN540650	P.C board BAP-303	1	
15	5457N00	KN540570	Tension base (5)	1	
16	24B6P00	HP241160	Upper thread sensorium pin	5	
17	24E5P00	HP241450	Thread guide felt fixing plate (5)	1	
18	24B7P00	HP241170	First thread guide (5)	1	
19	24B5P00	HP241150	Base (with screw)	5	
20	5476N00	KN540760	Dial type tension unit complate	5	
21	24B9P00	HP241190	Second thread guide plate (5)	1	
22	24E7P00	HP241470	Thread guide felt (5)	1	
23	5462N00	KN540620	P.C board BAP-301	1	
24	5475N00	KN540750	Thread cut cable 5	1	
25	5473N00	KN540730	Jamp cable 4	2	
26	5470N00	KN540700	Cable 1	2	
27	2403F	KN240030	Cancelling pin assy	1	
28	5478N00	KN540780	Tension base label	1	
29	5460N00	KN540600	Board fixing nut	4	
30	5466N00	KN540660	Contoral box	1	
31	5481N00	KN540810	P.C board BAP-304	1	
32	5482N00	KN540820	Power box K50-12	1	
33			Pan screw M4×8		
34			Hex. nut M8		
35			Truss screw M3×6		
36			Truss screw M4×6		
37			Set screw M4×6		
38			Tapping pan screw 3.5×8		
39			Truss screw M3×4		
40			Hex. socket bolt M2×3		
41			Hex. nut M2.6		
42			Truss screw M3×8		
43	5414L00	KL540140	Lower thread timing sensor bracket	1	
44	5413F	KF540130	Lower thread sensorium timing sensor (TLX5)	1	
45			Hex. socket bolt M6×30	1	

⑬ Under thread cut sensorium mechanism Ⅰ

ITEM	PART No.	LIST No.	DESCRIPTION	Q'TY	REMARK
46			Hex. socket bolt M3×15		
47	5485P00	HP540850	Lower thread sensorium plate fixing bracket	1	
48	5486P00	HP540860	Lower thread sensorium plate fixing base	1	
49	5484P00	HP540840	Lower thread sensorium plate	1	
50			Hex. socket bolt M3×10		

⑬ Under thread cut sensorium mechanism Ⅱ

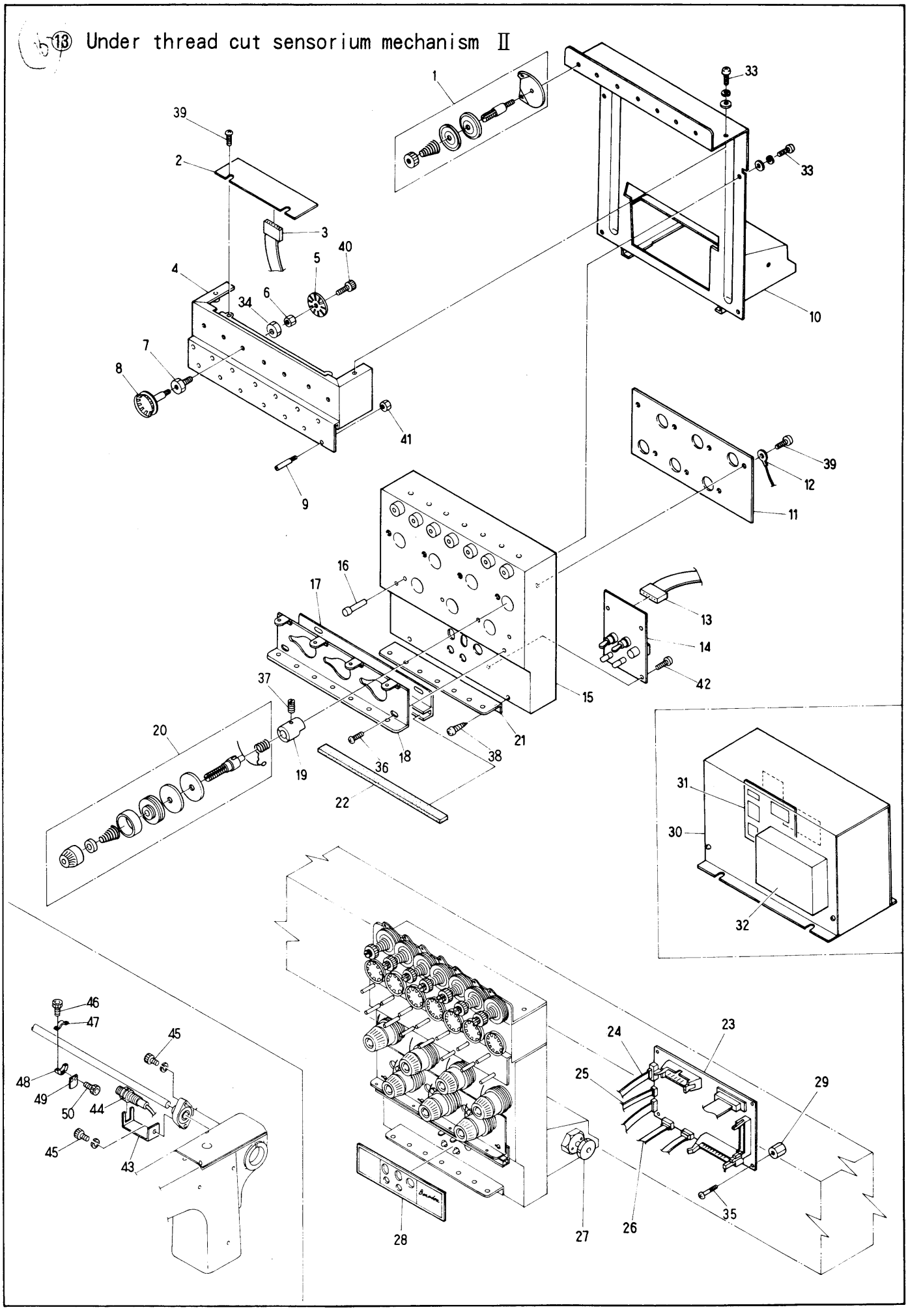

⑬ Under thread cut sensorium mechanism Ⅱ

ITEM	PART No.	LIST No.	DESCRIPTION	Q'TY	REMARK
1	24A3G	KG241030	Upper tension unit complete	7	
2	5464N00	KN540640	P.C board BAP-302-7 (7)	1	
3	5471N00	KN540710	Sensor cable 2	1	
4	5454N00	KN540540	Lower thread sensorium box (7)	1	
5	5452N00	KN540520	Lower thread sensorium sensor disk	7	
6	5451N00	KN540510	Tension wheel nut M2	7	
7	5461N00	KN540610	Wheel shaft metal	7	
8	5450N00	KN540500	Tension wheel shaft assy	7	
9	5459N00	KN540590	Thread guide pin	14	
10	5456N00	KN540560	Tension base (7)	1	
11	24D8P01	HP241381	Tension earth plate (7)	1	
12	24D9P00	HP241390	Tension earth cable	1	
13	5472N00	KN540720	Switch cable 3	1	
14	5465N00	KN540650	P.C board BAP-303	1	
15	5458N00	KN540580	Tension base (7)	1	
16	24B6P00	HP241160	Upper thread sensorium pin	7	
17	24E6P00	HP241460	Thread guid felt fixing plate	1	
18	24B8P00	HP241180	First thread guide	1	
19	24B5P00	HP241150	Base (with screw)	7	
20	5476N00	KN540760	Dial type tension unit complete	7	
21	24C0P00	HP241200	Second thread guide plate (7)	1	
22	24E8P00	HP241480	Thread guide felt (7)	1	
23	5462N00	KN540620	P.C board BAP-301	1	
24	5475N00	KN540750	Thread cut cable (7)	1	
25	5473N00	KN540730	Jamp cable 4	2	
26	5470N00	KN540700	Cable 1	2	
27	2403F	KN240030	Cancelling pin assy	1	
28	5478N00	KN540780	Tension base label	1	
29	5460N00	KN540600	Board fixing nut	4	
30	5466N00	KN540660	Contorol box	1	
31	5481N00	KN540810	P.C board BAP-304	1	
32	5482N00	KN540820	Power box K50-12	1	
33			Pan screw M4×8		
34			Hex. nut M8		
35			Truss screw M3×6		
36			Truss screw M4×6		
37			Set screw M4×6		
38			Tapping pan screw 3.5×8		
39			Truss screw M3×4		
40			Hex. socket bolt M2×3		
41			Hex. nut M2.6		
42			Truss screw M3×8		
43	5414L00	KL540140	Lower thread timing sensor bracket	1	
44	5413F	KF540130	Lower thread sensorium timing sensor (TLX5)	1	
45			Hex. socket bolt M6×30	1	

⑬ Under thread cut sensorium mechanism Ⅱ

ITEM	PART No.	LIST No.	DESCRIPTION	Q'TY	REMARK
46			Hex. socket bolt M3×15		
47	5485P00	HP540850	Lower thread sensorium plate fixing bracket	1	
48	5486P00	HP540860	Lower thread sensorium plate fixing base	1	
49	5484P00	HP540840	Lower thread sensorium plate	1	
50			Hex. socket bolt M3×10		

⑭ Thread cutting mechanism I

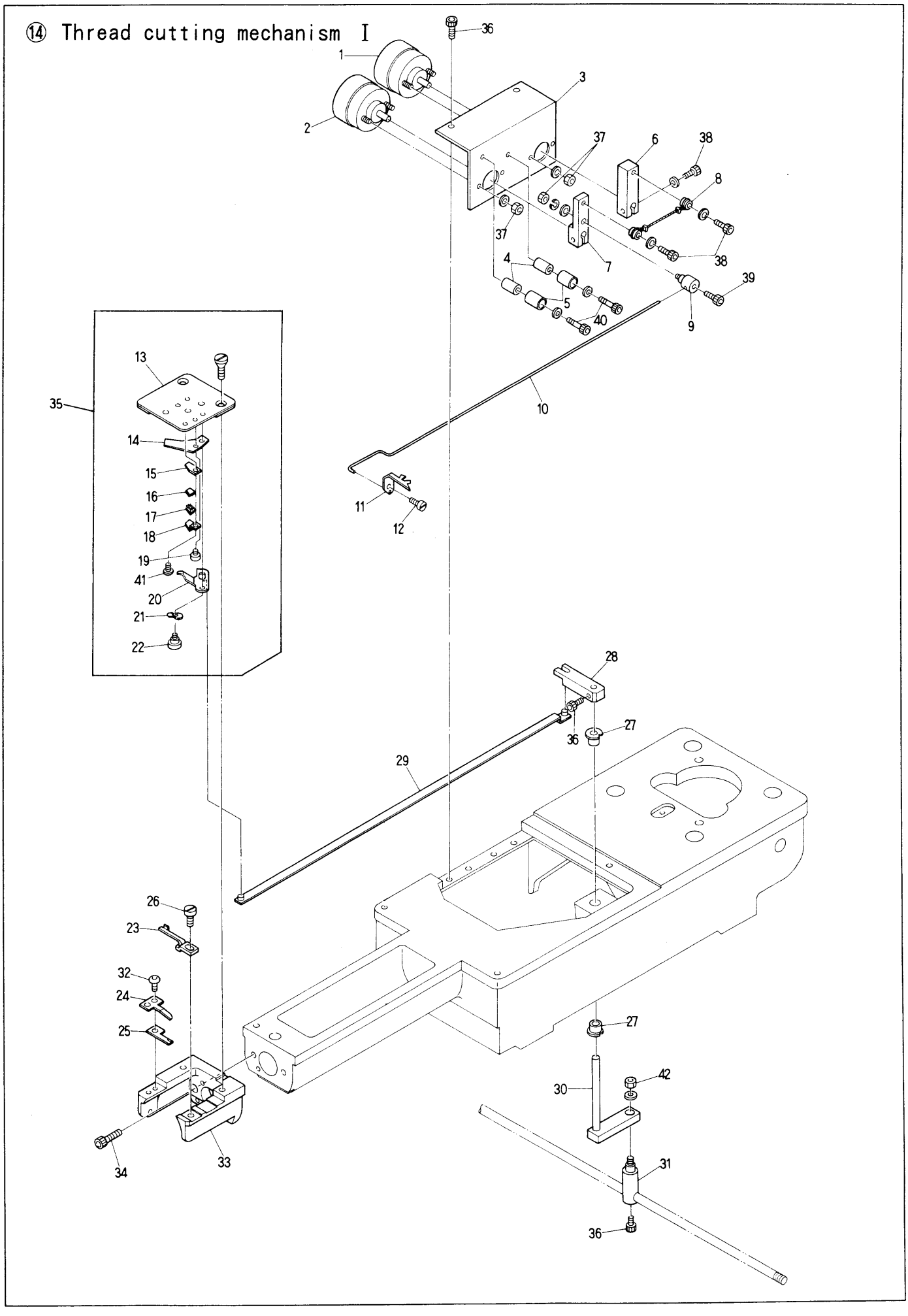

⑭ Thread cutting mechanism Ⅰ

ITEM	PART No.	LIST No.	DESCRIPTION	Q'TY	REMARK
1	95612	A9056012	Rotary solenoid (3EL25X3.8.9)	1	
2	95608	A9056008	Rotary solenoid (3ER25X3.8.9)	1	
3	27J6C	KC271960	Solenoid stay	1	
4	27G5N01	KN271651	Stopper eccentric	2	
5	27G6N01	KN271661	Eccentric cover	2	
6	27J5C	KC271950	Solenoid lever B	1	
7	27J4C	KC271940	Solenoid lever A	1	
8	27J7C	KC271970	Drive rope	1	
9	27A4C01	KC271041	Conecting clamp	1	
10	27A3C01	KC271031	Hook drive rod	1	
11	27A2C01	KC271021	Hook	1	
12	27A0C	KC271000	Upper thread cutter turning shaft	1	
13	2794C	KC270940	Needle plate	1	
14	2796C	KC270960	Fixed cutter	1	
15	27C2C	KC271220	Lower thread support stay (Upper)	1	
16	27C1C01	KC271211	Magic tape (Upper)	1	
17	27C0C01	KC271201	Magic tape (Lower)	1	
18	27B9C01	KC271191	Lower thread support stay (Lower)	1	
19	2798C	KC270980	Fixed cutter set screw	1	
20	2795C	KC270950	Lower thread cutter	1	
21	91345	A9013045	Wave washer (WW5)	1	
22	2797C	KC270970	Lower thread cutter turret shaft	1	
23	2264C01	KC220641	Bobbin case fixing plate	1	
24	27I9N00	KN271890	Cutter fixing plate	1	
25	27G0N00	KN271600	Upper thread cutter	1	
26			Screw (SM11/64 40×7)	1	
27	912B4	A9012114	DU bush (MB0505-10FDU)	1	
28	27B2C	KC271120	Lower thread cutter drive lever (Upper)	1	
29	27A7C	KC271070	Lower thread cutter drive rod	1	
30	27B3C	KC271130	Lower thread cutter drive lever (Lower)	1	
31	2364F	TF230640	Lock connecting bar clamp	1	
32			Hex. socket botton bolt M3×6	1	
33	2112L00	KL210120	Needle plate bracket (SRE-T)	1	
34			Hex. socket bolt M5×15	1	
35	27B8C	KC271180	Cylinder needle plate CMP	1	
36			Hex. socket bolt M4×8		
37			Hex. nut M3		
38			Hex. socket bolt M4×10		
39			Hex. socket bolt M3×5		
40			Hex. socket bolt M4×18		
41			Pan screw M3×3		
42			Hex. nut M4		

⑭ Thread cutting mechanism Ⅱ

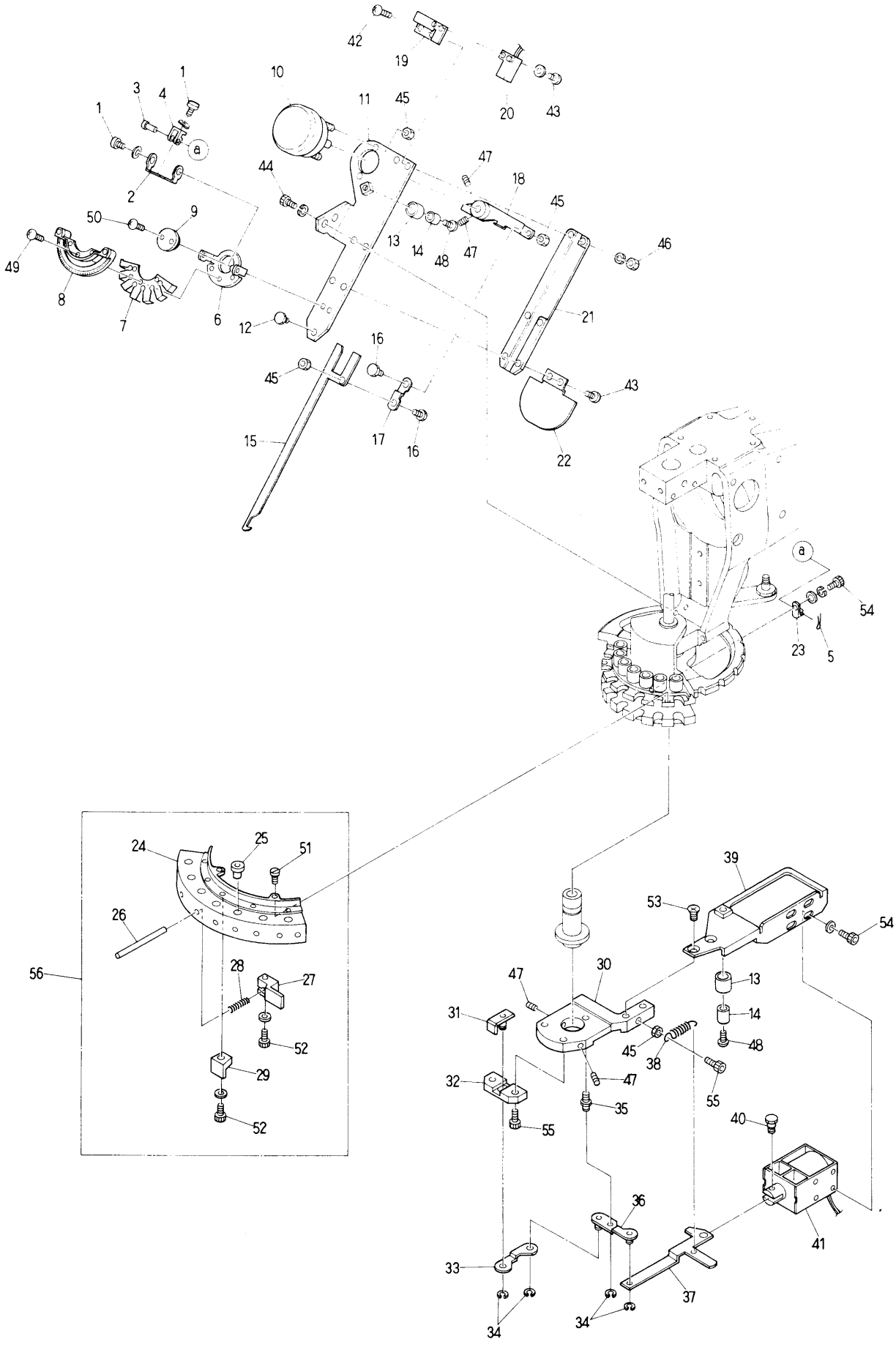

⑭ Thread cutting mechanism Ⅱ

(N=needle Q'ty)

ITEM	PART No.	LIST No.	DESCRIPTION	Q'TY	REMARK
1	2722L00	KL270220	Link turret pin	2	
2	2721L00	KL270210	Link	1	
3	2724L00	KL270240	Link guide pin	1	
4	2723L00	KL270230	Connecting link	1	
5			Slit pin 0.8×8	1	
6	2718L00	KL270180	Thread hanger plate fixing plate	1	
7	2720L00	KL270200	Upper thread support plate spring	1	
8	2719L00	KL270190	Thread hanger plate	1	
9	2717L00	KL270170	Thread hanger plate turret pin	1	
10	95607	A9056007	Rotary solenoid	1	
11	2708L00	KL270080	Thread away base	1	
12	2716L00	KL270160	Thread support open pin	1	
13	2715L00	KL270150	Eccentric cover	2	
14	2714L00	KL270140	Stopper eccent	2	
15	2710L00	KL270100	Thread away hook	1	
16	2713L00	KL270130	Lever connecting pin	2	
17	2712L00	KL270120	Connecting plate	1	
18	2711L00	KL270110	Thread away solenoid lever	1	
19	2726L00	KL270260	Switch stay	1	
20	95228	A9052028	Limit switch (RS-603)	1	
21	2709L00	KL270090	Thread away hook guide	1	
22	2727L00	KL270270	Thread away base cover	1	
23	2725L00	KL270250	Link driving pin	1	
24	2728C03	KC270283	Thread support apron (5)	1	
	2728G02	KG270282	Thread support apron (7)	1	
25	2358F	KF230580	Take up lever ceramic	N×1	
26	2731G	KG270310	Thread support pin (7)	N×1	
27	2730C01	KC270301	Thread support clamp	N×1	
28	2727C01	KC270271	Support spring	N×1	
29	2729C01	KC270292	Thread support block	N×1	
30	2700L00	KL270000	Fixing base	1	
31	2702L00	KL270020	Thread support slider	1	
32	2701L00	KL270010	Slide base	1	
33	2703L00	KL270030	Driving plate	1	
34	912C7	A9012127	E-ring	4	
35	2704L00	KL270040	Lever turret pin	1	
36	2705L00	KL270050	Solenoid lever	1	
37	2706L00	KL270060	Lever connecting plate	1	
38	2740C	KC270400	Thread support lever spring	1	
39	2707L00	KL270070	Solenoid stay	1	
40	2710C01	KC270101	Solenoid pin	1	
41	95613	A9056013	Keep solenoid	1	
42			Truss screw M3×10		
43			Truss screw M3× 6		
44			Hex, socket bolt M4×12		

⑭ Thread cutting mechanism Ⅱ

ITEM	PART No.	LIST No.	DESCRIPTION	Q'TY	REMARK
45			Hex. nut M4		
46			Hex. nut M3		
47			Hex. socket set screw M4×8		
48			Truss screw M4×16		
49			Truss screw M2× 3		
50			Truss screw M2× 5		
51			Set screw (SM9/64 40)		
52			Hex. socket bolt M4×10		
53			Pan screw M4× 8		
54			Hex. socket bolt M3×8		
55			Hex. socket bolt M4×10		
56	2776C01	KC270761	Thread support apron UF Assy (5)	1	
	2776G	KG270760	Thread support apron US Assy (7)	1	

⑮ Thread cutting drive mechanism <BESRE, BEXE> Ⅲ

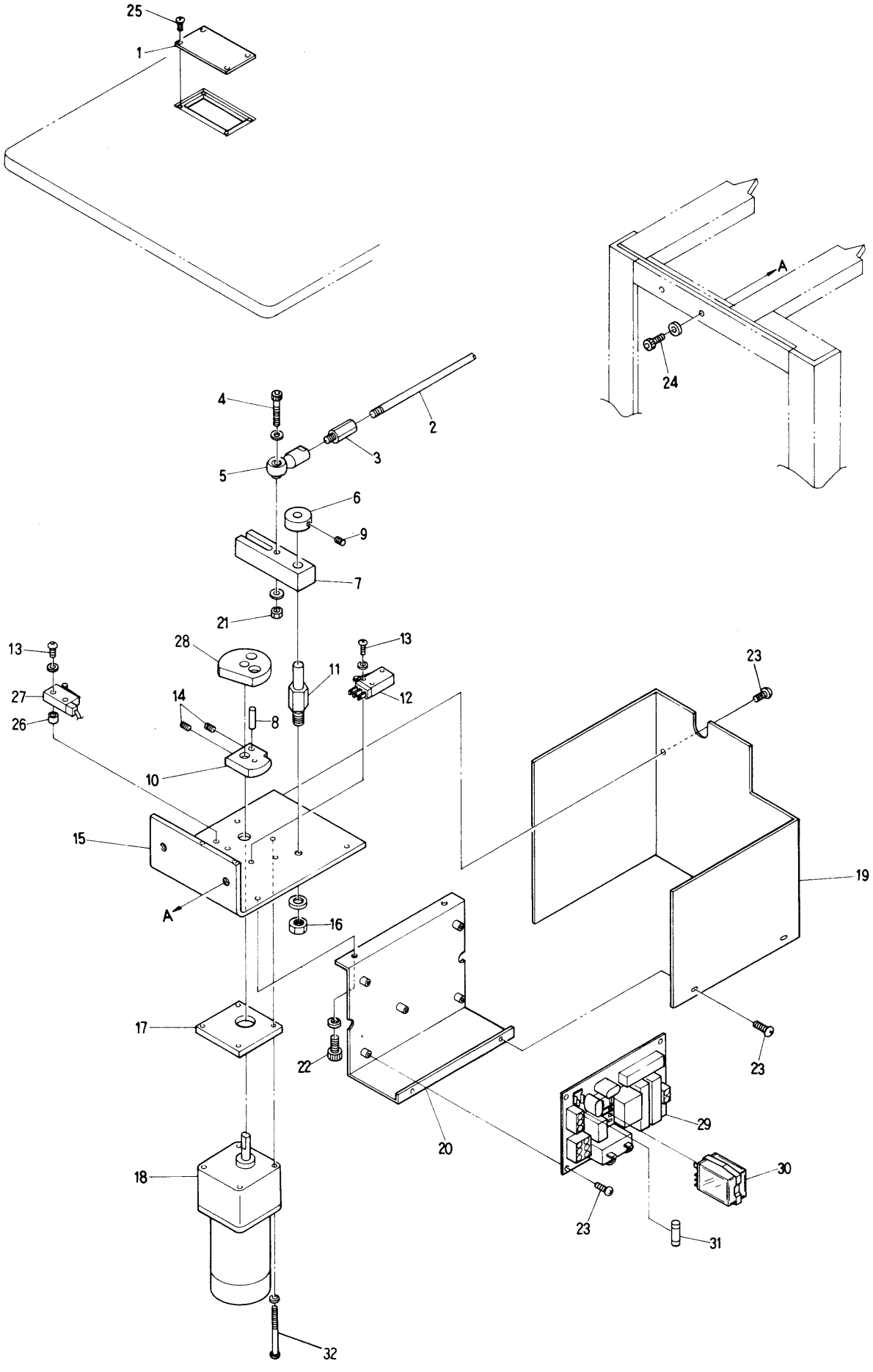

⑮ Thread cutting drive mechanism <BESRE. BEXE> Ⅲ

ITEM	PART No.	LIST No.	DESCRIPTION	Q'TY	REMARK
1	27E4C	KC271440	Drive servece cover	1	
2	3341C	KC330410	Lock connecting rod	1	
3	3351C	KC330510	Hex. connecting bar (L)	1	
4			Hex. socket bolt M6×20		
5	91202	A9012002	Uniball joint RB-6LS	1	
6	3318C	KC330180	Collar	1	
7	27B4C	KC271140	Motor lever	1	
8	27N5N00	KN272350	Drive pin	1	
9			Hex. socket set screw M5×6		
10	27B7C02	KC271172	Drive cam	1	
11	27B5C01	KC271151	Motor lever turret shaft	1	
12	95205	A9052005	Micro switch V-0IL 2255	1	
13			Screw M3×15 M3×20		
14			Hex. socket set screw M5×8		
15	27B6C02	KC271162	Motor bracket	1	
16			Hex. nut M8		
17	27E3C	KC271430	Motor specer	1	
18	96526	A9065026	Motor RM-H6A8PEAA(6RH-D36)	1	
19	27H1N00	KN271711	Motor bracket cover	1	
20	27E7C	KC271470	Board fixing stay	1	
21			Hex. nut M6		
22			Hex. socket bolt M5×8		
23			Screw M3-6		
24			Hex. socket bolt M8×30		
25			Flush screw M4×6		
26	27I3N00	KN271830	Switch specer	2	
27	95206	A9052006	Limint switch D4MC-2020	1	
28	27D9C	KC271390	Dog	1	
29	55N0000	EBE00010	Thread cutter drive contorol board	1	
30	95103	A9051003	LY-2 Relay	1	
31			Fuse 1A	1	
32			Pan screw M5×35		

⑮ Thread cutting drive mechanism <BEMRE> Ⅲ

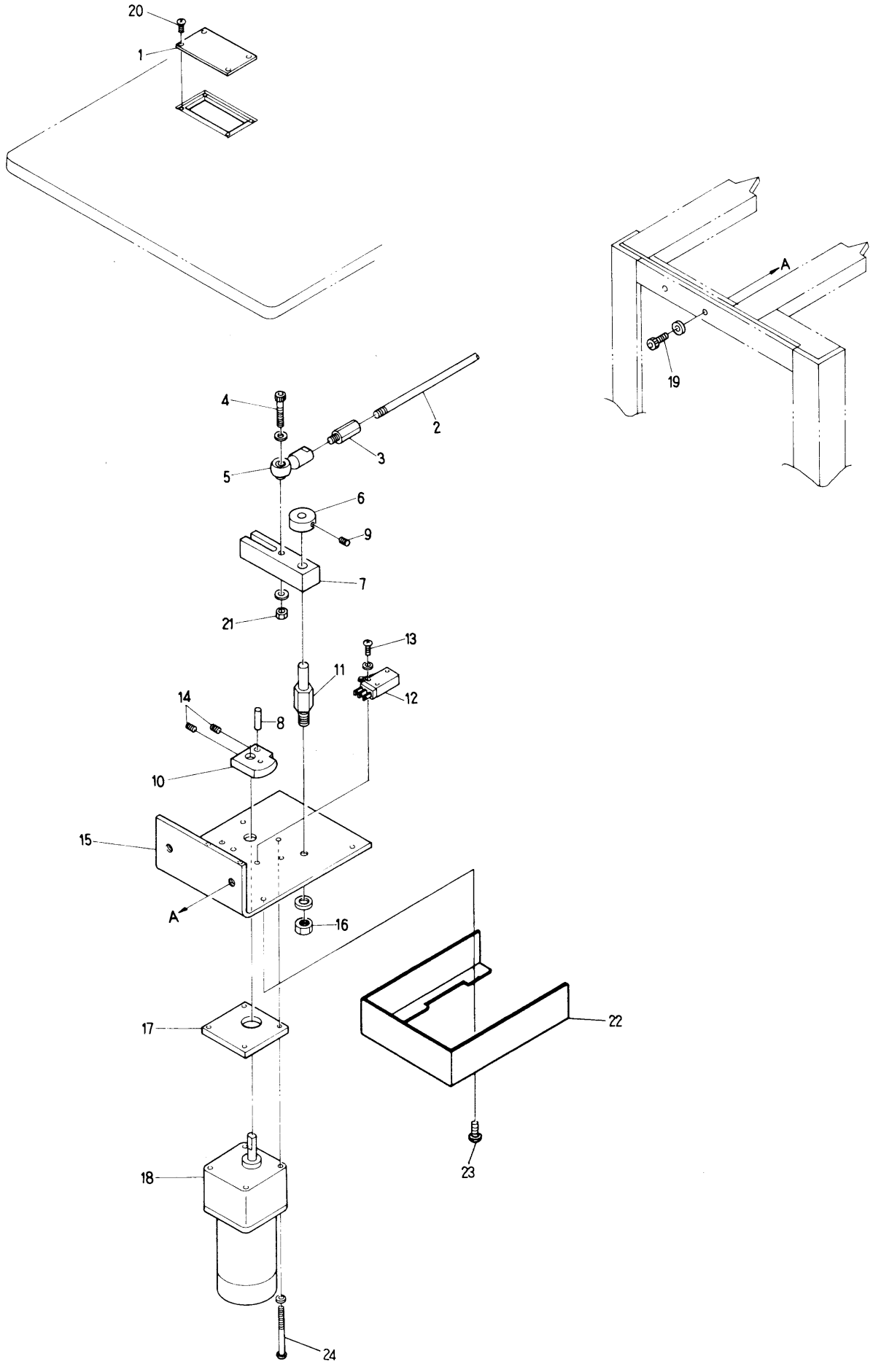

⑮ Thread cutting drive mechanism <BEMRE> Ⅲ

ITEM	PART No.	LIST No.	DESCRIPTION	Q'TY	REMARK
1	27E4C	KC271440	Drive servece cover	1	
2	3341C	KC330410	Lock connecting rod	1	
3	3351C	KC330510	Hex. connecting bar (L)	1	
4			Hex. socket bolt M6×20		
5	91202	A9012002	Uniball joint RB-6LS	1	
6	3318C	KC330180	Collar	1	
7	27B4C	KC271140	Motor lever	1	
8	27N5N00	KN272350	Drive pin	1	
9			Hex. socket set screw M5×6		
10	27B7C02	KC271172	Drive cam	1	
11	27B5C01	KC271151	Motor lever turret shaft	1	
12	95205	A9052005	Micro switch V-OIL 2255	1	
13			Screw M3×15 M3×20		
14			Hex. socket set screw M5×8		
15	27B6C02	KC271162	Motor bracket	1	
16			Hex. nut M8		
17	27E3C	KC271430	Motor specer	1	
18	96526	A9065026	Motor RM-H6A8PEAA(6RH-D36)	1	
19			Hex. socket bolt M8×30		
20			Flush screw M4×6		
21			Hex. nut M6		
22	27H1N02	KN271712	Motor bracket cover	1	
23			Truss screw M3×6		
24			Pan screw M5×65		

I N D E X

LIST No.	PART No.	PAGE No.	ITEM	LIST No.	PART No.	PAGE No.	ITEM
1A123804800	1C00010	5	11	A9053033	95333	29	38
1BL123804800	2B00010	5	1	A9056007	95607	43	10
1JP10430	7A07PL0	19	1	A9056008	95608	41	2
1LKC450020	7380C	23	13	A9056012	95612	41	1
1LKC450020	7380C	25	13	A9056013	95613	43	41
1PL12380480	3B00080	17	54	A9065026	96526	45	18
A9010006	91006	27	2	A9065026	96526	47	18
A9010006	91006	29	12	EAY009A1	51J2CA1	31	1
A9010009	91009	11	10	EAY009A2	51J2CA2	31	21
A9010017	91017	7	5	EAY009A3	51J2CA3	31	20
A9010017	91017	17	57	EAY010A2	51L2CA2	31	21
A9011001	91101	27	13	EAY010A3	51L2CA3	31	20
A9011017	91117	17	4	EAY011A1	51J3CA1	35	1
A9011021	91121	9	22	EAY011A2	51J3CA2	35	4
A9011022	91122	9	23	EAY011A3	51J3CA3	35	20
A9011023	91123	9	21	EAY012A2	51L3CA2	35	4
A9011028	91128	23	11	EAY012A3	51L3CA3	35	20
A9011028	91128	25	11	EAY017A1	51G3NA1	33	25
A9011063	91163	29	10	EAY017A2	51G3NA2	33	26
A9011079	91179	29	25	EAY017A3	51G3NA3	33	22
A9012001	91201	21	39	EAY018A3	51G4NA3	33	22
A9012002	91202	21	40	EBE00010	55N0000	45	29
A9012002	91202	45	5	EBY00060	55C0050	31	4
A9012002	91202	47	5	EBY00080	55C0070	31	22
A9012003	91203	9	58	EBY00080	55C0070	35	7
A9012005	91205	9	58	EBY00090	55C0080	31	3
A9012007	91207	7	34	EBY00110	55C0110	31	9
A9012027	91227	7	57	EBY00110	55C0110	35	5
A9012052	91252	27	21	EBY00150	55C0150	13	6
A9012052	91252	29	23	EBY00150	55C0150	15	6
A9012114	912B4	41	27	EBY00180	55C0180	21	6
A9012127	912C7	43	34	EBY00190	55C0190	31	2
A9012137	912D7	21	50	EBY00260	55Y0020	35	9
A9012143	912E3	21	47	EBY00270	55Y0030	35	10
A9012203	912K3	21	20	EBY00290	55N0040	31	7
A9013045	91345	37	21	EBY00300	55N0050	31	7
A9014063	91463	7	60	EBY00310	55N0060	31	6
A9020066	92066	17	43	EBY00320	55N0070	31	8
A9020098	92098	29	19	EBY00340	55Y0050	35	2
A9051003	95103	45	30	EBY00350	55Y0060	35	3
A9052005	95205	45	12	EBY00410	55N0090	31	5
A9052005	95205	47	12	EBY00450	55R0000	33	1
A9052006	95206	45	27	EBY00460	55R0010	33	2
A9052028	95228	43	20	EBY00470	55R0020	33	3
A9053033	95333	27	44	EBY00480	55R0030	33	4

I N D E X

LIST No.	PART No.	PAGE No.	ITEM	LIST No.	PART No.	PAGE No.	ITEM
EBY00490	55R0040	33	5	HP241150	24B5P00	39	19
EBY00510	55R0060	33	11	HP241160	24B6P00	13	3
EBY00520	55R0070	33	10	HP241160	24B6P00	15	3
EBY00530	55R0080	33	8	HP241160	24B6P00	37	16
EBY00540	55R0090	33	7	HP241160	24B6P00	39	16
EBY00550	55R0100	33	9	HP241170	24B7P00	13	9
EBY00560	55R0110	33	12	HP241170	24B7P00	37	18
EBY00570	55R0120	33	6	HP241170	24B7P00	39	18
EBY00590	55N0130	35	11	HP241180	24B8P00	15	9
EBY00630	55R0140	33	21	HP241190	24B9P00	13	7
EBY00640	55Y0100	35	9	HP241190	24B9P00	37	21
EBY0500	55R0050	33	24	HP241190	24B9P00	39	21
HH120900	1290H	19	7	HP241200	24C0P00	15	7
HH320550	3255H	17	32	HP241210	24C1P00	11	18
HH470080	4708H	23	10	HP241371	24D7P01	13	4
HH470080	4708H	25	10	HP241371	24D9P00	15	5
HH470180	4718H	27	9	HP241371	24D9P00	37	11
HH480300	4830H	29	20	HP241371	24D9P00	39	11
HH480310	4831H	27	7	HP241381	24D8P01	15	4
HH480310	4831H	29	18	HP241390	24D9P00	13	5
HH480410	4841H	27	20	HP241390	24D9P00	37	12
HH481030	48A3H	27	5	HP241390	24D9P00	39	12
HH481900	48J0H	27	54	HP241400	24E0P00	13	13
HH481900	48J0H	29	2	HP241400	24E0P00	15	13
HH481931	48J3H01	27	52	HP241410	24E1P00	13	12
HH481931	48J3H01	29	3	HP241410	24E1P00	15	12
HH481931	48J3H01	25	8	HP241450	24E5P00	13	8
HH481970	48J7H	29	11	HP241450	24E5P00	37	17
HH481991	48J9H01	29	26	HP241450	24E5P00	39	17
HH482110	48L1H	29	29	HP241460	24E6P00	15	8
HP231290	23C9P00	9	29	HP241470	24E7P00	13	10
HP231301	23D0P01	9	27	HP241470	24E7P00	37	22
HP231310	23D1P00	9	24	HP241470	24E7P00	39	22
HP231330	23D3P00	11	9	HP241480	24E8P00	15	10
HP231340	23D4P00	9	55	HP250050	2505P00	13	17
HP231370	23D7P00	9	26	HP250581	2558P01	13	16
HP231390	23D9P00	7	13	HP250581	2558P01	15	16
HP240020	2402P00	11	1	HP312940	31T4N00	17	5
HP241110	24B1P00	13	2	HP313401	31Y0P01	17	44
HP241120	24B2P00	15	2	HP313430	31Y3P01	17	24
HP241130	24B3P00	11	19	HP313480	31Y8P00	17	23
HP241140	24B4P00	11	19	HP314631	31DZP01	17	47
HP241150	24B5P00	13	11	HP314670	31EDP00	17	8
HP241150	24B5P00	15	11	HP321140	32B4P00	17	59
HP241150	24B5P00	37	19	HP482980	48T8P00	29	24

I N D E X

LIST No.	PART No.	PAGE No.	ITEM	LIST No.	PART No.	PAGE No.	ITEM
HP482990	48T9P00	29	6	KC271162	27B6C02	45	15
HP540840	5484P00	37	49	KC271162	27B6C02	47	15
HP540840	5484P00	39	49	KC271172	27B7C02	45	10
HP540850	5485P00	37	47	KC271172	27B7C02	47	10
HP540850	5485P00	39	47	KC271180	27B8C	41	35
HP540860	5486P00	37	48	KC271191	27B9C01	41	18
HP540860	5486P00	39	48	KC271201	27C0C01	41	17
HP710790	7179P00	19	16	KC271211	27C1C01	41	16
HP711200	71C0P00	19	18	KC271220	27C2C	41	15
KC020220	5222C	35	6	KC271390	27D9C	45	28
KC110970	1197C	19	12	KC271430	27E3C	45	17
KC120841	1284C01	5	15	KC271430	27E3C	47	17
KC120860	1286C	5	10	KC271440	27E4C	45	1
KC140530	1453C	5	14	KC271440	27E4C	47	1
KC140540	1454C	5	16	KC271470	27E7C	45	20
KC140560	1456C	5	13	KC271940	27J4C	41	7
KC140630	1463C	27	26	KC271950	27J5C	41	6
KC150151	1515C01	5	19	KC271960	27J6C	41	3
KC220210	2221C	7	40	KC271970	27J7C	41	8
KC220641	2264C01	41	23	KC310110	3111C	17	40
KC250471	2547C01	7	55	KC310120	3112C	17	41
KC250481	2548C01	7	54	KC312800	31S0C	17	15
KC270101	2710C01	43	40	KC312831	31S3C01	17	45
KC270271	2727C01	43	28	KC312851	31S5C01	17	11
KC270283	2728C03	43	24	KC312890	31S9C	17	36
KC270292	2729C01	43	29	KC312911	31T1C01	17	28
KC270301	2730C01	43	27	KC312921	31T2C01	17	38
KC270400	2740C	43	38	KC320590	3259C	17	33
KC270761	2776C01	43	56	KC320820	3282C00	17	60
KC270940	2794C	41	13	KC330130	3313C	21	7
KC270950	2795C	41	20	KC330160	3316C	21	9
KC270960	2796C	41	14	KC330170	3317C	21	3
KC270970	2797C	41	22	KC330180	3318C	21	10
KC270980	2798C	41	19	KC330180	3318C	45	6
KC271000	27A0C	41	12	KC330180	3318C	47	6
KC271021	27A2C01	41	11	KC330190	3319C	21	8
KC271031	27A3C01	41	10	KC330210	3321C	21	25
KC271041	27A4C01	41	9	KC330230	3323C	21	48
KC271070	27A7C	41	29	KC330260	3326C	21	31
KC271120	27B2C	41	28	KC330280	3328C	21	2
KC271130	27B3C	41	30	KC330290	3329C	21	52
KC271140	27B4C	45	7	KC330410	3341C	9	15
KC271140	27B4C	47	7	KC330410	3341C	45	2
KC271151	27B5C01	45	11	KC330410	3341C	47	2
KC271151	27B5C01	47	11	KC330510	3351C	21	38

I N D E X

LIST No.	PART No.	PAGE No.	ITEM	LIST No.	PART No.	PAGE No.	ITEM
KC330510	3351C	45	3	KC481360	48D6C	27	33
KC330510	3351C	47	3	KC520020	5202C	33	19
KC330610	3361C	21	21	KC520020	5202C	31	17
KC330810	3381C	21	27	KC520020	5202C	35	18
KC330850	3385C	21	43	KC520220	5222C	33	23
KC330910	3391C	21	32	KC520220	5222C	31	10
KC450180	4518C	27	28	KC530230	5323C00	33	16
KC450180	4518C	29	37	KC530230	5323C00	31	14
KC450190	4519C	27	29	KC530230	5323C00	35	15
KC450190	4519C	29	33	KC530240	5324C00	33	14
KC450470	4547C	27	51	KC530240	5324C00	31	12
KC450470	4547C	29	34	KC530240	5324C00	35	13
KC450480	4548C	27	23	KC330310380	3331C	9	56
KC450480	4548C	29	36	KF220130	2213F	7	11
KC450730	4573C	23	1	KF220230	2223F	7	44
KC450730	4573C	25	1	KF220270	2227F	7	27
KC450960	4596C	27	22	KF220290	2229F	7	37
KC450970	4597C	29	16	KF220310	2231F	7	49
KC470190	4719C	27	16	KF220370	2237F	7	52
KC470460	4746C	29	32	KF220410	2241F	7	51
KC470520	4752C	27	15	KF220460	2246F	7	19
KC470540	4754C	27	19	KF220470	2247F	7	26
KC470590	4759C	27	11	KF220480	2248F	7	35
KC470620	4762C	27	14	KF220750	2275F00	7	49
KC470640	4764C	27	11	KF230010	2301F	9	42
KC470650	4765C	27	6	KF230150	2315F	9	59
KC480131	4813C01	29	22	KF230150	2315F	21	22
KC480190	4819C	23	7	KF230180	2318F	9	43
KC480210	4821C	27	4	KF230210	2321F	9	45
KC480231	4823C01	29	15	KF230230	2323F	9	49
KC480240	4824C	27	1	KF230240	2324F	9	50
KC480260	4826C	27	3	KF230250	2325F	9	51
KC480260	4826C	29	13	KF230320	2332F	9	2
KC480270	4827C	27	18	KF230360	2336F	21	17
KC480320	4832C	27	24	KF230420	2342F	7	30
KC480330	4833C	27	10	KF230450	2345F	9	28
KC480350	4835C	23	15	KF230480	2348F	9	30
KC480350	4835C	25	15	KF230500	2350F	9	37
KC480380	4838C	29	17	KF230512	2351F02	9	3
KC481230	48C3C	27	25	KF230521	2352F01	9	4
KC481240	48C4C	27	27	KF230580	2358F	9	40
KC481250	48C5C	25	16	KF230580	2358F	43	25
KC481260	48C6C	23	8	KF230630	2363F	9	10
KC481260	48C6C	25	6	KF230630	2363F	21	42
KC481281	48C8C01	27	32	KF230640	2364F	9	12

I N D E X

LIST No.	PART No.	PAGE No.	ITEM	LIST No.	PART No.	PAGE No.	ITEM
KF230650	2365F	9	9	KG230610	2361G	21	49
KF230661	2366F01	9	19	KG241020	24A2G	13	1
KF230670	2367F	9	20	KG241020	24A2G	15	1
KF230910	2391F	9	47	KG241030	24A3G	37	1
KF230920	2392F	9	46	KG241030	24A3G	39	1
KF230930	2393F	9	48	KG241031	24A3G01	19	17
KF240030	2403F	11	2	KG250010	2501G	15	17
KF240420	2442F	11	13	KG270282	2728G02	43	24
KF240200	2420F00	11	3	KG270310	2731G	43	26
KF240440	2444F	11	4	KG270760	2776G	43	56
KF240450	2445F	11	5	KG330150	3315G	21	12
KF240460	2446F	11	12	KG330220	3322G	21	14
KF240470	2447F	11	11	KG710161	7116G01	19	19
KF240480	2448F	11	8	KL110910	1191L00	5	4
KF240490	2449F	11	7	KL141650	14G5L00	5	6
KF240610	2461F	11	14	KL141660	14G6L00	5	8
KF240900	2490F	19	2	KL210000	2100L00	7	23
KF240931	2493F01	13	15	KL2100 0T	2100L0T	7	23
KF240931	2493F01	15	15	KL210010	2101L00	7	23
KF250900	2590F	7	42	KL2100 1T	2101L0T	7	23
KF330381	3338F01	9	14	KL210120	2112L00	41	33
KF530110	5311F	33	15	KL210130	2113L00	7	47
KF530110	5311F	31	13	KL210140	2114L00	7	17
KF530110	5311F	35	14	KL220000	2200L00	7	16
KF530120	5312F	33	15	KL220010	2201L00	7	24
KF530120	5312F	31	13	KL220020	2202L00	7	29
KF530120	5312F	35	14	KL220030	2203L00	7	15
KF530150	5315F	33	17	KL220040	2204L00	7	6
KF530150	5315F	31	15	KL220050	2205L00	7	21
KF530150	5315F	35	16	KL220060	2206L00	7	25
KF530160	5316F	33	13	KL220070	2207L00	7	36
KF530160	5316F	31	11	KL220080	2208L00	7	12
KF530160	5316F	35	12	KL220090	2209L00	7	4
KF530170	5317F	33	27	KL220100	2210L00	7	1
KF530170	5317F	31	19	KL220110	2211L00	7	3
KF530170	5317F	35	8	KL220120	2212L00	7	41
KF540130	5413F	37	44	KL220130	2213L00	7	14
KF540130	5413F	39	44	KL220140	2214L00	7	20
KF710280	7128F	19	9	KL220150	2215L00	7	8
KF730790	7379F	23	14	KL230000	2300L00	9	1
KF730790	7379F	25	14	KL230010	2301L00	9	34
KG150412	1541G02	5	2	KL230020	2302L00	9	32
KG210911	2191G01	7	62	KL230030	2303L00	9	33
KG230020	2302G	9	44	KL230050	2305L00	9	54
KG230610	2361G	9	17	KL230070	2307L00	9	39

I N D E X

LIST No.	PART No.	PAGE No.	ITEM	LIST No.	PART No.	PAGE No.	ITEM
KL230080	2308L00	9	39	KL310040	3104L00	17	25
KL230110	2311L00	9	53	KL310051	3105L01	17	19
KL230120	2312L00	9	53	KL310060	3106L00	5	17
KL230130	2313L00	9	52	KL320000	3200L00	17	58
KL230140	2314L00	9	31	KL320020	3202L00	17	56
KL230170	2317L00	9	35	KL330010	3301L00	21	35
KL230190	2319L00	9	41	KL330020	3302L00	21	23
KL230200	2320L00	9	41	KL330040	3304L00	21	18
KL230210	2321L00	9	60	KL330050	3305L00	21	16
KL230220	2322L00	9	60	KL540140	3305L00	37	43
KL250000	2500L00	15	14	KL540140	3305L00	39	43
KL250010	2501L00	13	14	KN230410	2341N00	7	31
KL250040	2504L00	7	7	KN230430	2343N00	7	33
KL250050	2505L00	7	59	KN240030	2403F	37	27
KL270000	2700L00	43	30	KN240030	2403F	39	27
KL270010	2701L00	43	32	KN271600	27G0N00	41	25
KL270020	2702L00	43	31	KN271651	27G5N01	41	4
KL270030	2703L00	43	33	KN271661	27G6N01	41	5
KL270040	2704L00	43	35	KN271711	27H1N00	45	19
KL270050	2705L00	43	36	KN271712	27H1N02	47	22
KL270060	2706L00	43	37	KN271830	27I3N00	45	26
KL270070	2707L00	43	39	KN271890	27I9N00	41	24
KL270080	2708L00	43	11	KN272350	27N5N00	45	8
KL270090	2709L00	43	21	KN272350	27N5N00	47	8
KL270100	2710L00	43	15	KN312810	31S1N00	17	17
KL270110	2711L00	43	18	KN312820	31S2N00	17	30
KL270120	2712L00	43	17	KN313670	31AHN00	17	10
KL270130	2713L00	43	16	KN314590	31DVY00	17	46
KL270140	2714L00	43	14	KN314600	31DWY00	17	46
KL270150	2715L00	43	13	KN314610	31DXN00	17	46
KL270160	2716L00	43	12	KN314620	31DYN00	17	46
KL270170	2717L00	43	9	KN315110	31FVN00	17	42
KL270180	2718L00	43	6	KN315130	31FXN00	17	7
KL270190	2719L00	43	8	KN330110	3311N00	29	1
KL270200	2720L00	43	7	KN330121	3312N01	21	37
KL270210	2721L00	43	2	KN330240	3324Y00	21	45
KL270220	2722L00	43	1	KN330250	3325Y00	21	46
KL270230	2723L00	43	4	KN332010	33K1N00	21	37
KL270240	2724L00	43	3	KN470151	4715N01	27	56
KL270250	2725L00	43	23	KN470160	4716N00	29	4
KL270260	2726L00	43	19	KN470690	4769N00	27	12
KL270270	2727L00	43	22	KN480061	4806N01	27	59
KL310010	3101L00	17	2	KN480061	4806N01	29	52
KL310020	3102L00	17	50	KN480400	4840N00	23	2
KL310030	3103L00	17	51	KN480400	4840N00	25	2

I N D E X

LIST No.	PART No.	PAGE No.	ITEM
KN480790	4879N00	27	17
KN482600	48Q0N00	23	7
KN482630	48Q3N00	29	14
KN482640	48Q4N00	29	51
KN490120	4912N00	29	9
KN490130	4913N00	29	8
KN490140	4914N00	29	7
KN490150	4915N00	29	5
KN490200	4920N00	27	8
KN511020	51A2N00	17	35
KN540500	5450N00	37	8
KN540500	5450N00	39	8
KN540510	5451N00	37	6
KN540510	5451N00	39	6
KN540520	5452N00	37	5
KN540520	5452N00	39	5
KN540530	5453N00	37	4
KN540540	5454N00	39	4
KN540550	5455N00	37	10
KN540560	5456N00	39	10
KN540570	5457N00	37	15
KN540580	5458N00	39	15
KN540590	5459N00	37	9
KN540590	5459N00	39	9
KN540600	5460N00	37	29
KN540600	5460N00	39	29
KN540610	5461N00	37	7
KN540610	5461N00	39	7
KN540620	5462N00	37	23
KN540620	5462N00	39	23
KN540630	5463N00	37	2
KN540640	5464N00	39	2
KN540650	5465N00	37	14
KN540650	5465N00	39	14
KN540660	5466N00	37	30
KN540660	5466N00	39	30
KN540700	5470N00	37	26
KN540700	5470N00	39	26
KN540710	5471N00	37	3
KN540710	5471N00	39	3
KN540720	5472N00	37	13
KN540720	5472N00	39	13
KN540730	5473N00	37	25
KN540730	5473N00	39	25
KN540750	5475N00	37	24
KN540750	5475N00	39	24
KN540760	5476N00	37	20
KN540760	5476N00	39	20
KN540780	5478N00	37	28
KN540780	5478N00	39	28
KN540810	5418N00	37	31
KN540810	5418N00	39	31
KN540820	5482N00	37	32
KN540820	5482N00	39	32
KN51040012300	5140C	13	18
KN51040012300	5140C	15	18
KU470110	4711U00	25	10
KU470151	4715U01	25	9
KU480160	4816U00	25	4
MA220510	2251A	7	45
MA250131	2513A01	7	43
MA450660	4566A	25	1
MA471020	47A2A	25	11
TF230640	2364F	41	31
WW310210	3121W00	17	31