Barudan

HIGH SPEED AUTOMATIC EMBROIDERY MACHINE

MODEL **BEXH**
BESRH

PARTS BOOK

BARUDAN CO., LTD.

ADDRESS 20-TSUKAGOSHI, JOSUIJI
ICHINOMIYA-CITY, AICHI-PREF.
JAPAN
TEL. (0586) 76-1137
TELEX 4573268 BARUNA J
CABLE BARUNA ICHINOMIYA

① BESRH MACHINE LAYOUT

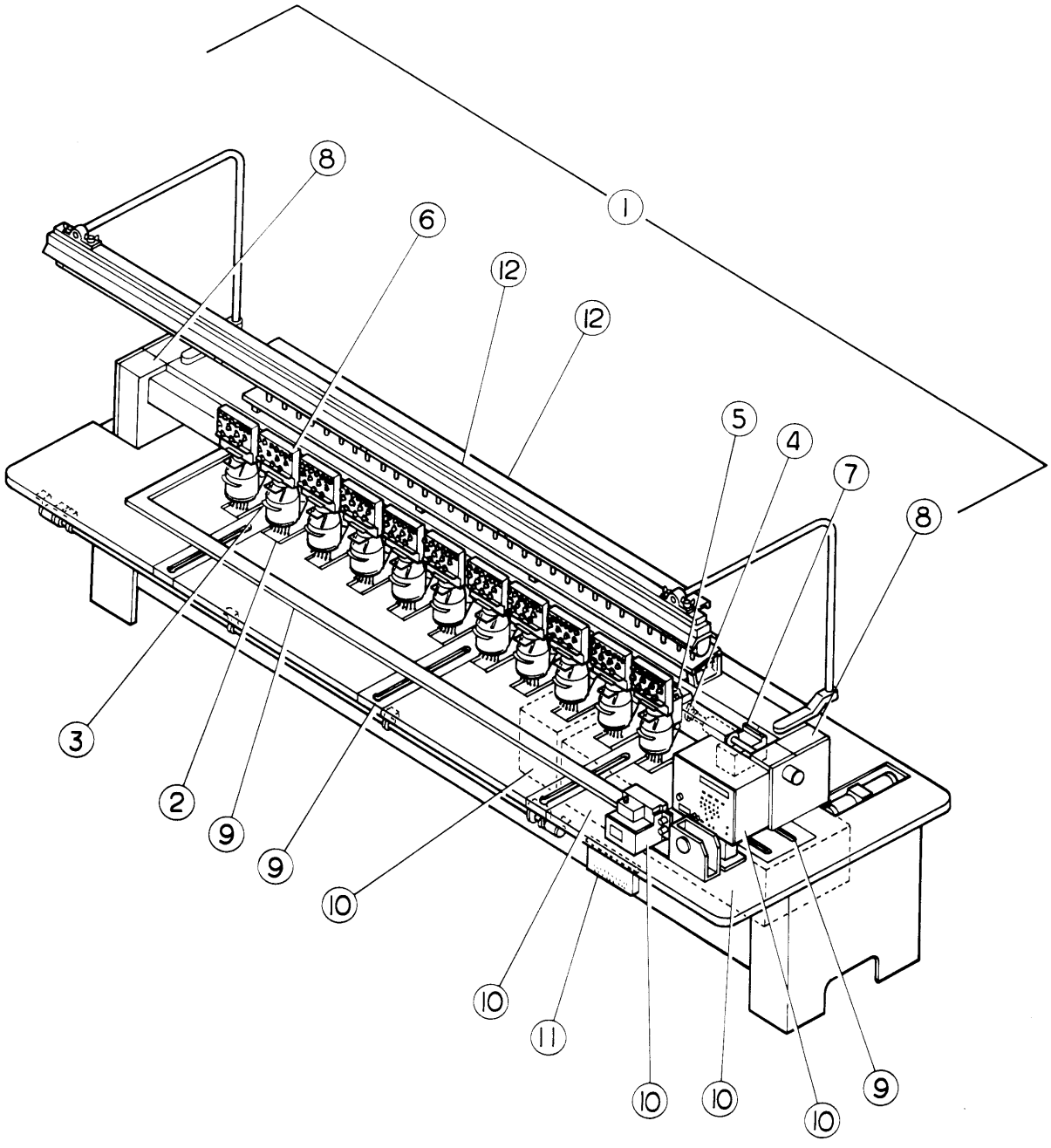

① BEXH MACHINE LAYOUT

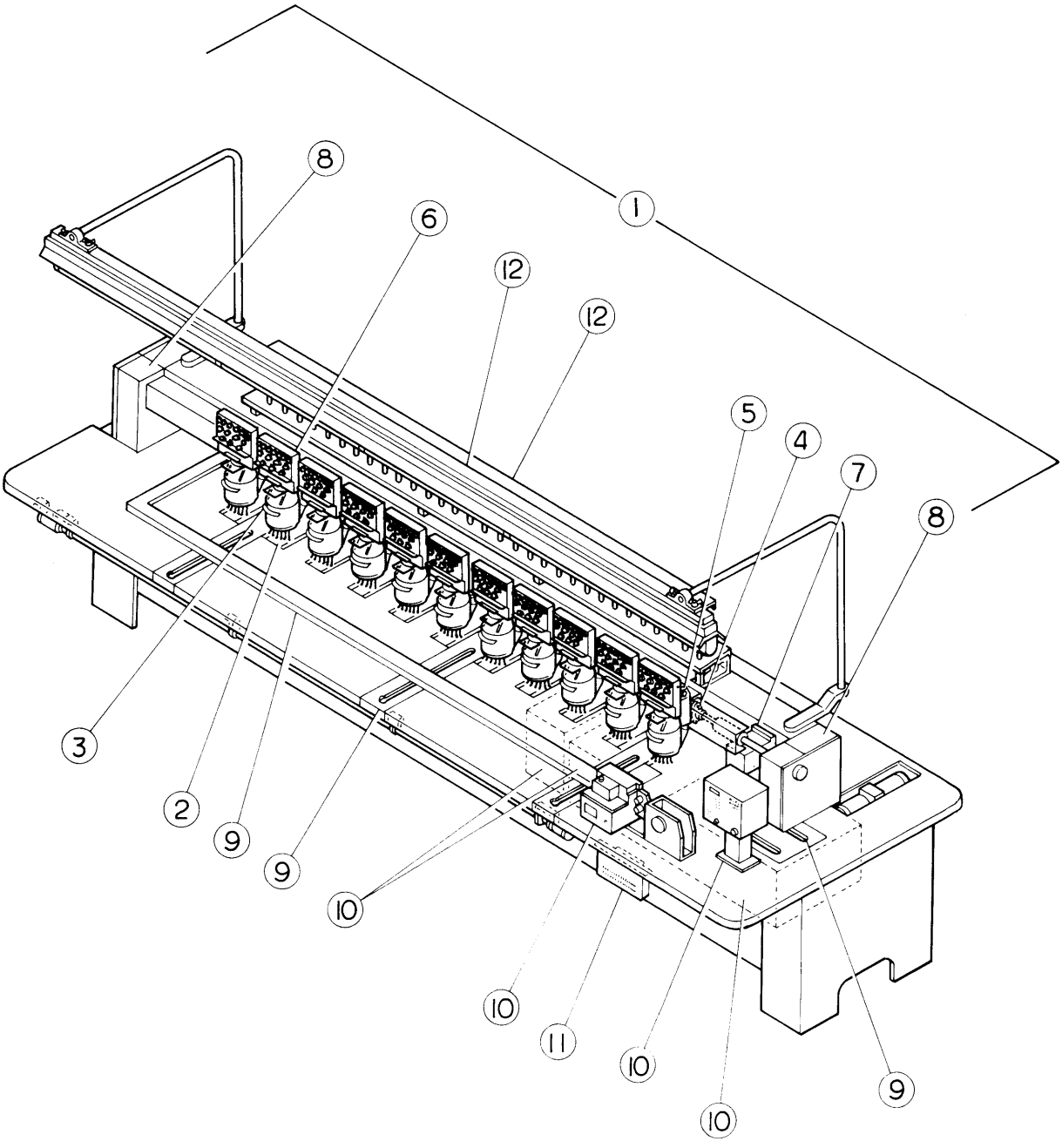

BEXH BESRH COMPUTERIZED EMBROIDERY MACHINE PARTS LIST

INDEX

① MACHINE LAYOUT

PAGE NO.

1. ② SEWING HEAD BASE ..... 1～ 2
2. ③ NEEDLE BAR MECHANISM I (3 NEEDLES) ..... 3～ 4
3. ③ NEEDLE BAR MECHANISM II (5 NEEDLES) ..... 5～ 6
4. ③ NEEDLE BAR MECHANISM III (7 NEEDLES) ..... 7～ 8
5. ③ TAKE UP LEVER MECHANISM I (3 NEEDLES) ..... 9～10
6. ③ TAKE UP LEVER MECHANISM II (5 NEEDLES) ..... 11～12
7. ③ TAKE UP LEVER MECHANISM III (7 NEEDLES) ..... 13～14
8. ④ SEWING HEAD MECHANISM ..... 15～16
9. ⑤ JUNP STITCH MECHANISM ..... 17～18
10. ⑥ THREAD GUIDE MECHANISM I (3 NEEDLES) ..... 19～20
11. ⑥ THREAD GUIDE MECHANISM II (5 NEEDLES) ..... 21～22
12. ⑥ THREAD GUIDE MECHANISM III (7 NEEDLES) ..... 23～24
13. ⑦ COLOR CHANGE MECHANISM I ..... 25～26
14. ⑦ COLOR CHANGE MECHANISM II ..... 27～28
15. ⑧ DRIVE MECHANISM I ..... 29～30
16. ⑧ DRIVE MECHANISM II ..... 31～32
17. ⑧ DRIVE MECHANISM III ..... 33～34
18. ⑨ PANTOGRAPH DRIVE MECHANISM I ..... 35～36
19. ⑨ PANTOGRAPH DRIVE MECHANISM II (V DIRECTION) ..... 37～38
20. ⑨ PANTOGRAPH DRIVE MECHANISM III (H DIRECTION) ..... 39～40
21. ⑩ CONTROL SYSTEM I (BESRH) ..... 41～42
22. ⑩ CONTROL SYSTEM II (BEXH) ..... 43～44
23. ⑪ LINDERTHREAD STOP MOTION ..... 45～46
24. ⑫ THREAD STAND, LAMP, ETC. ..... 47～48
25. ⑬ TRIMMING DEVICE FOR TOP & BOTTOM THREAD I (OPTION) ..... 49～51
26. ⑬ TRIMMING DEVICE FOR TOP & BOTTOM THREAD II (OPTION) ..... 52～53

② SEWING HEAD BASE

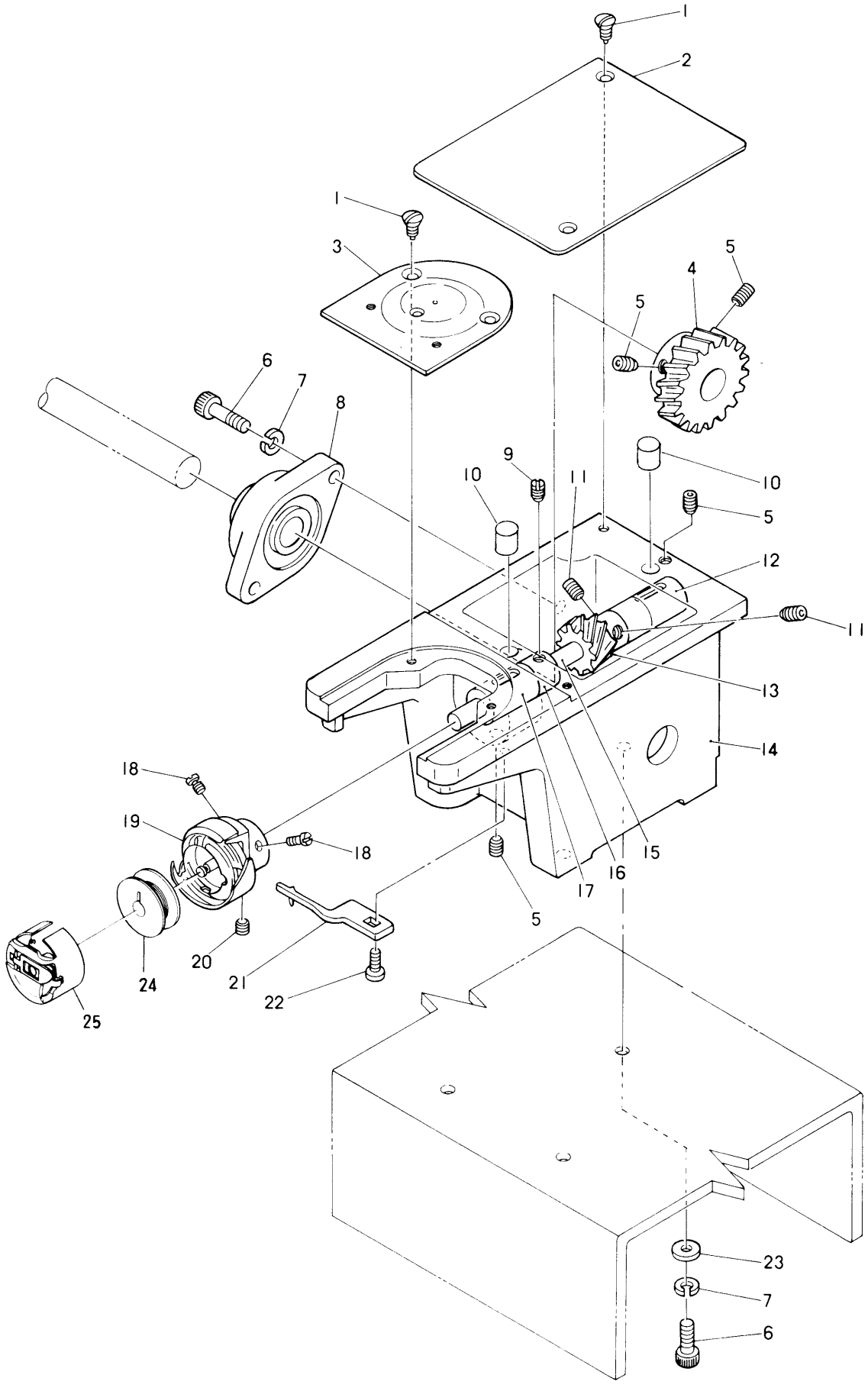

② SEWING HEAD BASE

NO.	PARTS NO.	DESCRIPTION	REMARKS
1		NEEDLE PLATE SCREW (SM11 64MT40)	
2	2191H	HEAD COVER	
3	2513F	NEEDLE PLATE	
4	3262H	BEVEL GEAR	
5		GRUB SCREW (M6)	
6		SCREW (M6)	
7		SPRING WASHER	
8	91141	GANG SHAFT BEARING CASE (FYH BLF 202N)	
9		GRUB SCREW (SM 15 64 MT 28)	
10	2257H	DUST PROOF OILER	
11		GRUB SCREW (M6 ℓ=5)	
12	2222H	HOOK SHAFT BUSH (REAR)	
13	2249H	BEVEL GEAR (SMALL)	
14	2121F	SEWING HEAD BASE PLATE	
15	2221H	HOOK SHAFT	
16	2229F	COLLAR	
17	2223H	HOOK SHAFT BUSH (FRONT)	
18		SCREW	
19	2231F	SEWING HOOK AND BASE (HSL AX SP)	
20		SCREW	
21	2251F	HOOK BASE RETAINING FINGER	
22		SCREW (SM11 64MT40)	
23		PLATE WASHER	
24	2241F	BOBBIN	
25	2235F	BOBBIN CASE	

③ NEEDLE BAR MECHANISM I (3 NEEDLES)

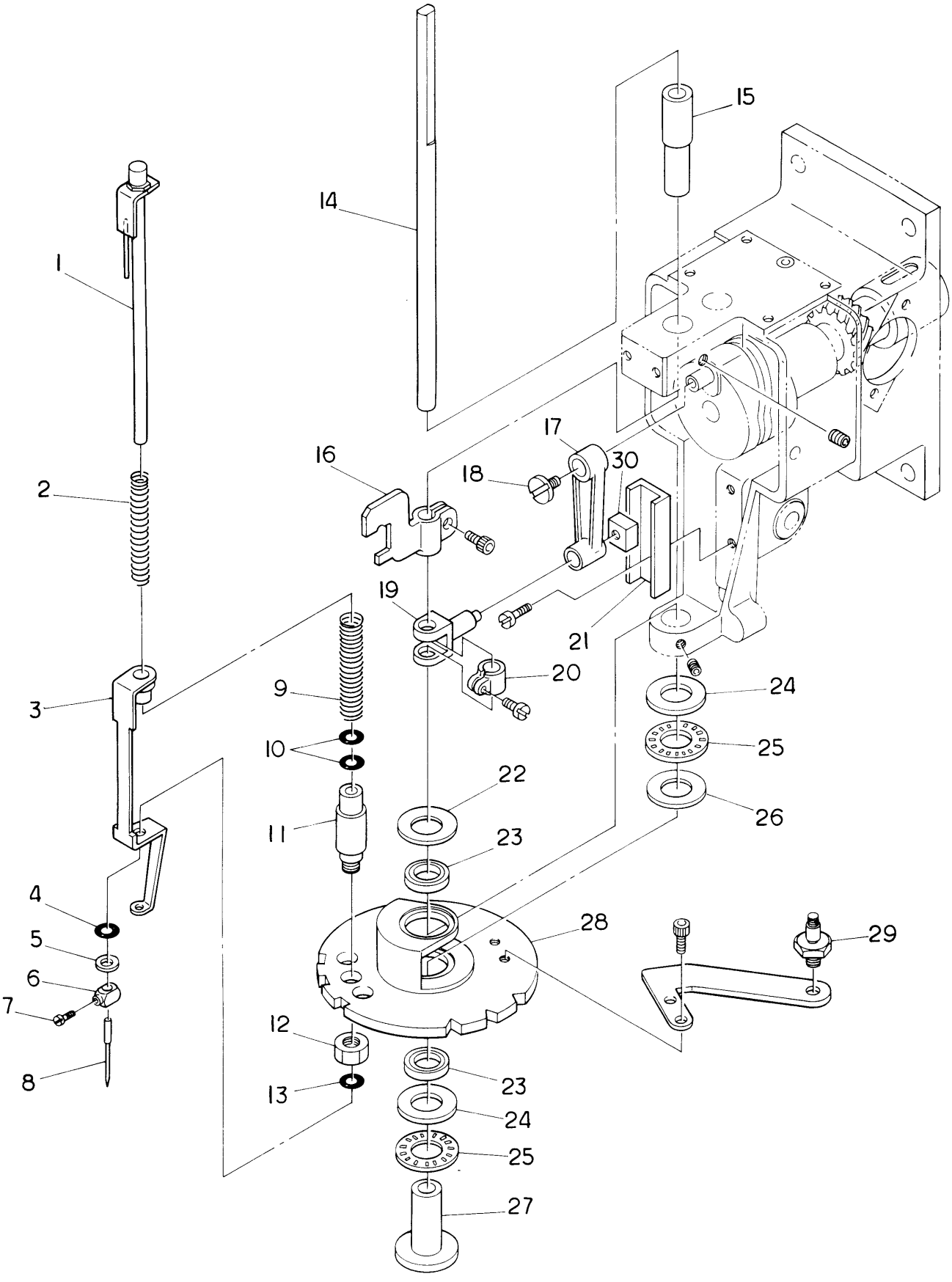

③ NEEDLE BAR MECHANISM I (3 NEEDLES)

NO.	PARTS NO.	DESCRIPTION	REMARKS
1	2301F	NEEDLE BAR ASSY	
2	2318F	NEEDLE BAR SPRING (UPPER)	
3	2302F	PRESSOR FOOT	
4	2391F	O RING (Small)	
5	2393F	SPACER (2mm)	
6	2323F	NEEDLE CLAMP	
7	2324F	NEEDLE CLAMP SCREW (SM9 64MT 40)	
8	2325F	NEEDLE	
9	2321F	NEEDLE BAR SPRING (UNDER)	
10	2391F	O RING (Big)	
11	2313F	THREADED BUSH	
12		NUT M10	
13	2391F	O RING (Small)	
14	2331F	NEEDLE BAR DRIVER SHAFT	
15	2332F	UPPER BUSH	
16	2334C	NEEDLE BAR DRIVER	
17	23D0P00	NEEDLE BAR CONNECTING LINK	
18	2345F	SCREW FOR NEEDLE BAR CONNECTING LINK	
19	23C9P00	NEEDLE BAR DRIVING FORK	
20	2348F	NEEDLE SHAFT CLAMP	
21	23D1P00	GUIDE CASE	
22	2312F	THRUST RACE WASHER	
23	91009	BEARING SPACER A2015	
24	91123	THRUST WASHER GS 1528	
25	91121	THRUST RACE NTB 1528	
26	91122	THRUST WASHER AS 1528	
27	2333F	BEARING SHAFT	
28	2319F	NEEDLE BAR TURRET PLATE (3 NEEDLES)	
29	23D4P00	PIVOT CONNECTING STUD	
30		NEEDLE BAR CONNECTING LINK GUIDE	

③ NEEDLE BAR MECHANISM II (5 NEEDLES)

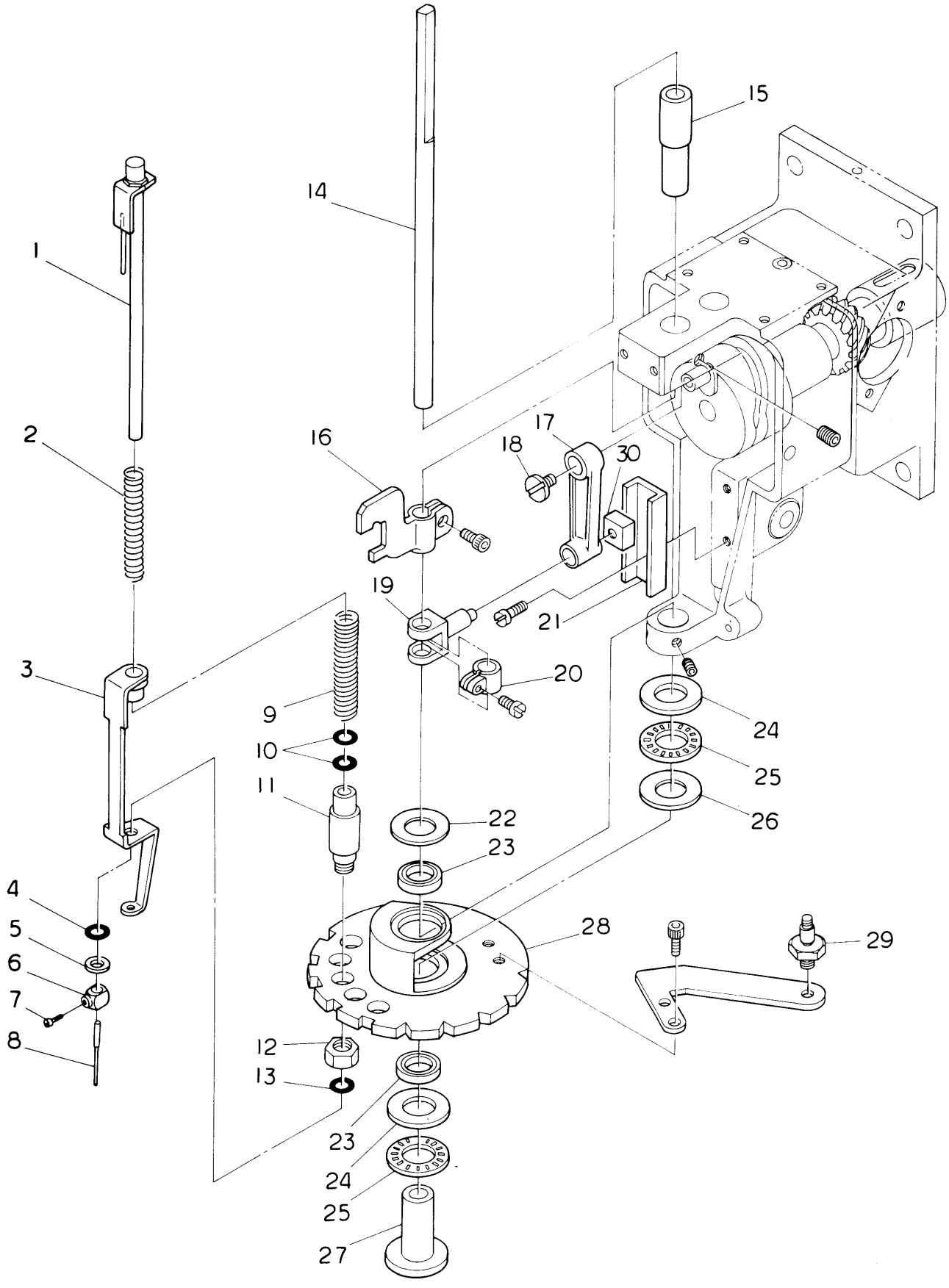

③ NEEDLE BAR MECHANISM II (5 NEEDLES)

NO.	PARTS NO.	DESCRIPTION	REMARKS
1	2301F	NEEDLE BAR ASSY	
2	2318F	NEEDLE BAR SPRING (UPPER)	
3	2302F	PRESSOR FOOT	
4	2391F	O RING (Small)	
5	2393F	SPACER (2㎜)	
6	2323F	NEEDLE CLAMP	
7	2324F	NEEDLE CLAMP SCREW (SM9 64MT40)	
8	2325F	NEEDLE	
9	2321F	NEEDLE BAR SPRING (UNDER)	
10	2391F	O RING (Big)	
11	2313F	THREADED BUSH	
12		NUT M10	
13	2391F	O RING (Small)	
14	2331F	NEEDLE BAR DRIVE SHAFT	
15	2332F	UPPER BUSH	
16	2334C	NEEDLE BAR DRIVER	
17	23D0P00	NEEDLE BAR CONNECTING LINK	
18	2345F	SCREW FOR NEEDLE BAR CONNECTING LINK	
19	23C9P00	NEEDLE BAR DRIVING FORK	
20	2348F	NEEDLE SHAFT CLAMP	
21	23D1P00	GUIDE CASE	
22	2312F	THRUST RACE WASHER	
23	91009	BEARING SPACER A2015	
24	91123	THRUST WASHER GS 1528	
25	91121	THRUST RACE NTB 1528	
26	91122	THRUST WASHER AS 1528	
27	2333F	BEARING SHAFT	
28	2311F	NEEDLE BAR TURRET PLATE	
29	23D4P00	PIVOT CONNECTING STUD	
30		NEEDLE BAR CONNECTING LINK GUIDE	

③ NEEDLE BAR MECHANISM III (7 NEEDLES)

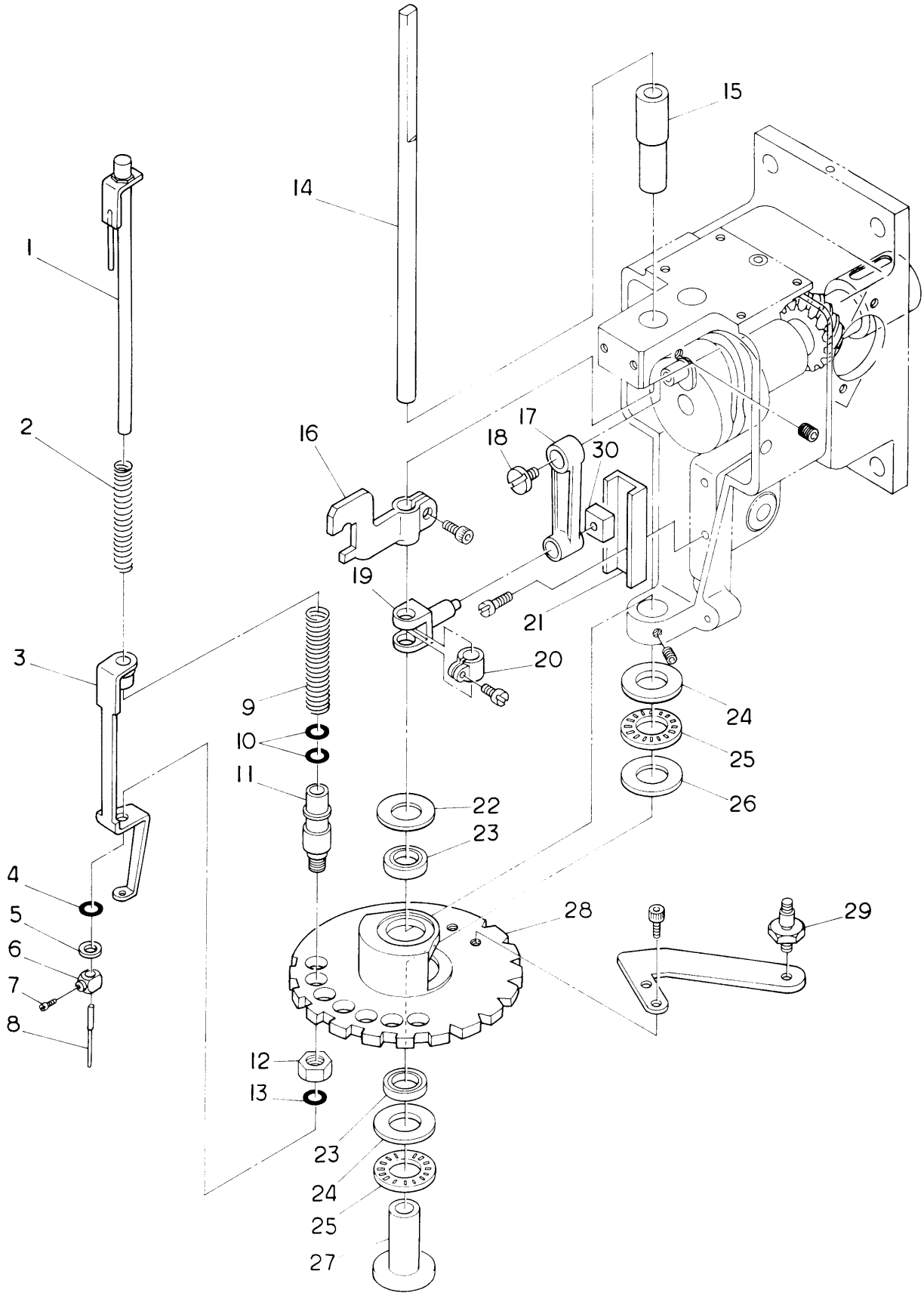

③ NEEDLE BAR MECHANISM III (7 NEEDLES)

NO.	PARTS NO.	DESCRIPTION	REMARKS
1	2301F	NEEDLE BAR ASSY	
2	2318F	NEEDLE BAR SPRING (UPPER)	
3	2302G	PRESSOR FOOT	
4	2391F	O RING (Small)	
5	2393F	SPACER (2mm)	
6	2323F	NEEDLE CLAMP	
7	2324F	NEEDLE CLAMP SCREW (SM9 64MT10)	
8	2325F	NEEDLE	
9	2321F	NEEDLE BAR SPRING (UNDER)	
10	2391F	O RING (Big)	
11	2313G	THREADED BUSH	
12		NUT M10	
13	2391F	O RING (Small)	
14	2331F	NEEDLE BAR DRIVE SHAFT	
15	2332F	UPPER BUSH	
16	2334G	NEEDLE BAR DRIVER	
17	23D0P00	NEEDLE BAR CONNECTING LINK	
18	2345F	SCREW FOR NEEDLE BAR CONNECTING LINK	
19	23C9P00	NEEDLE BAR DRIVING FORK	
20	2348F	NEEDLE SHAFT CLAMP	
21	23D1P00	GUIDE CASE	
22	2312F	THRUST RACE WASHER	
23	91009	BEARING SPACER A2015	
24	91123	THRUST WASHER GS-1528	
25	91121	THRUST RACE NTB-1528	
26	91122	THRUST WASHER AS-1528	
27	2333F	BEARING SHAFT	
28	2311G	NEEDLE BAR TURRET PLATE	
29	23D4P00	PIVOT CONNECTING STUD	
30		NEEDLE BAR CONNECTING LINK GUIDE	

③ TAKE UP LEVER MECHANISM I (3 NEEDLES) 5

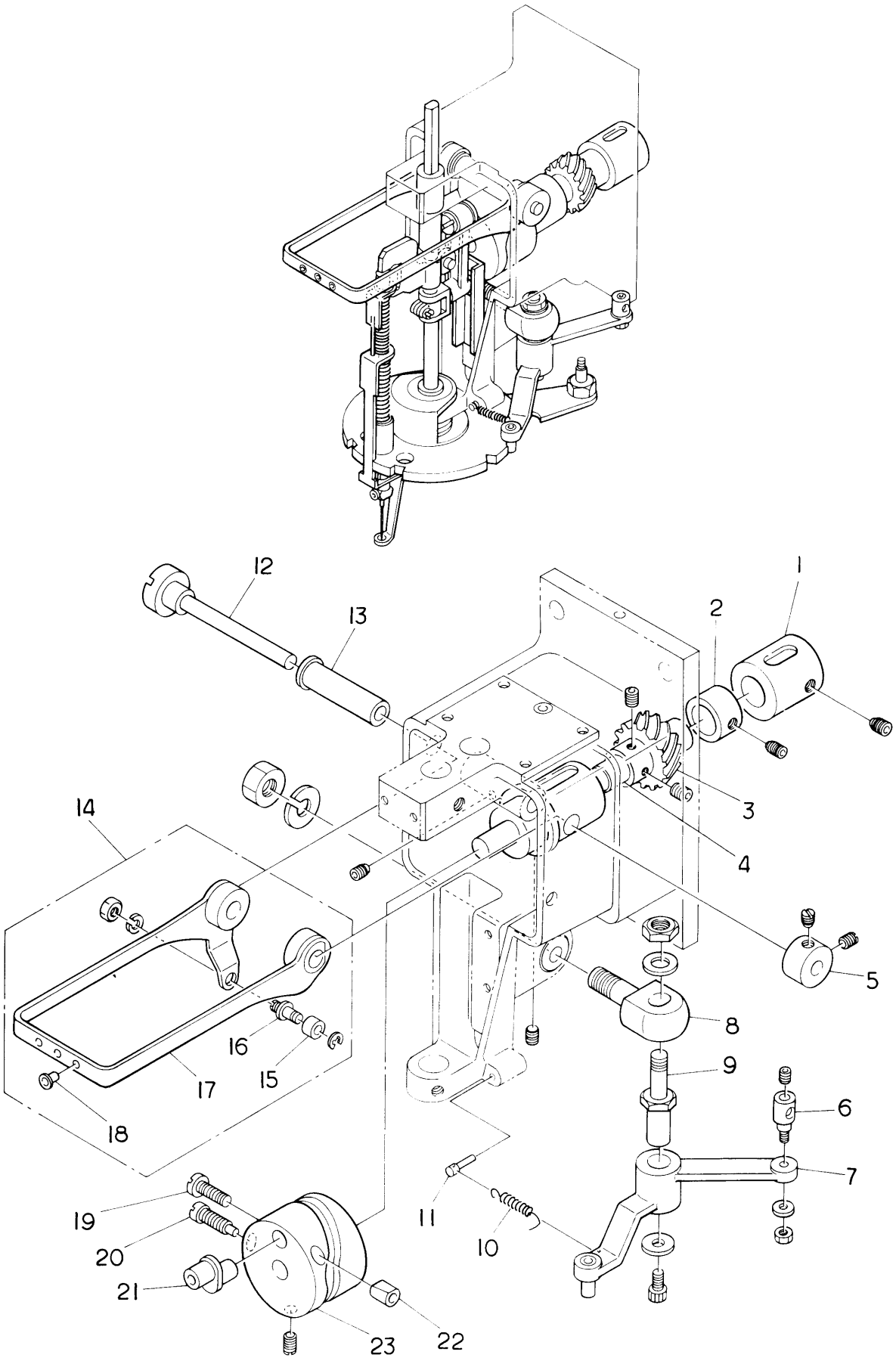

③ TAKE UP LEVER MECHANISM I (3 NEEDLES)

NO.	PARTS NO.	DESCRIPTION	REMARKS
1	23C6P00	REAR BUSH	
2	23D2P00	COLLAR	
3	23C5P00	HELICAL GEAR SHAFT	
4	23C8P00	ARM SHAFT	
5	2355F	RETAINING COLLAR	
6	2364F	LOCK BAR POSITIONING CLAMP	
7	2361F	LOCK LEVER	
8	2365F	LOCK LEVER BRACKET	
9	2363F	THREADED STUD	
10	2366F	LOCK LEVER SPRING	
11	2367F	LOCK LEVER SPRING PIN	
12	2351F	TAKE UP LEVER SHAFT	
13	2352F	TAKE UP SPINDLE BUSH	
14	2309F	TAKE UP LEVER ASSY COMPLETE	
15	2353F	ROLLER TAKE UP LEXER CAM	
16	2354F	STUD	
17	2385F	TAKE UP LEVER	
18	2358F	TAKE UP LEVER CERAMIC GUIDE	
19		SCREW (SM3 16MT32)	
20	2342F	LOCATING SCREW	
21	2343F	90 CRANK PIN	
22	2344F	RETAINING PIN	
23	2341F	TAKE UP LEVER CAM	
24	23C7P00	FRONT BUSH	

③ TAKE UP LEVER MECHANISM II (5 NEEDLES)

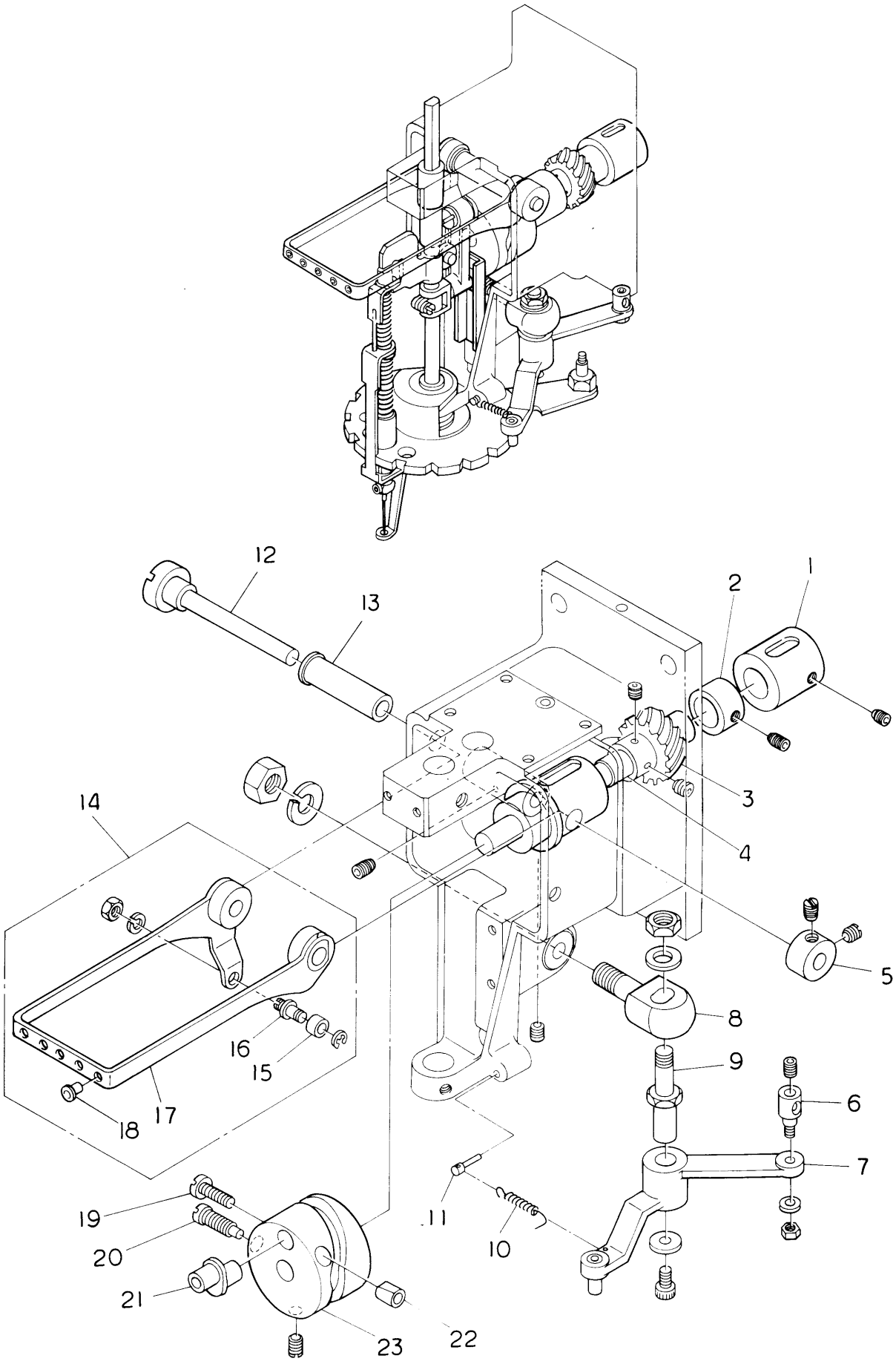

③ TAKE UP LEVER MECHANISM II (5 NEEDLES)

NO.	PARTS NO.	DESCRIPTION	REMARKS
1	23C6P00	REAR BUSH	
2	23D2P00	COLLAR	
3	23C5P00	HELICAL GEAR SHAFT	
4	23C8P00	ARM SHAFT	
5	2355F	RETAINING COLLAR	
6	2364F	LOCK BAR POSITIONING CLAMP	
7	2361F	LOCK LEVER	
8	2365F	LOCK LEVER BRACKET	
9	2363F	THREADED STUD	
10	2366F	LOCK LEVER SPRING	
11	2367F	LOCK LEVER SPRING PIN	
12	2351F	TAKE UP LEVER SHAFT	
13	2352F	TAKE UP SPINDLE BUSH	
14	2303C	TAKE UP LEVER ASSY COMPLETE	
15	2353F	ROLLER TAKE UP LEXER CAM	
16	2354F	STUD	
17	2349C	TAKE UP LEVER	
18	2358F	TAKE UP LEVER CERAMIC GUIDE	
19		SCREW (SM3 16MT32)	
20	2342F	LOCATING SCREW	
21	2343F	90° CRANK PIN	
22	2344F	RETAINING PIN	
23	2341F	TAKE UP LEVER CAM	
24	23C7P00	FRONT BUSH	

③ TAKE UP LEVER MECHANISM III (7 NEEDLES)

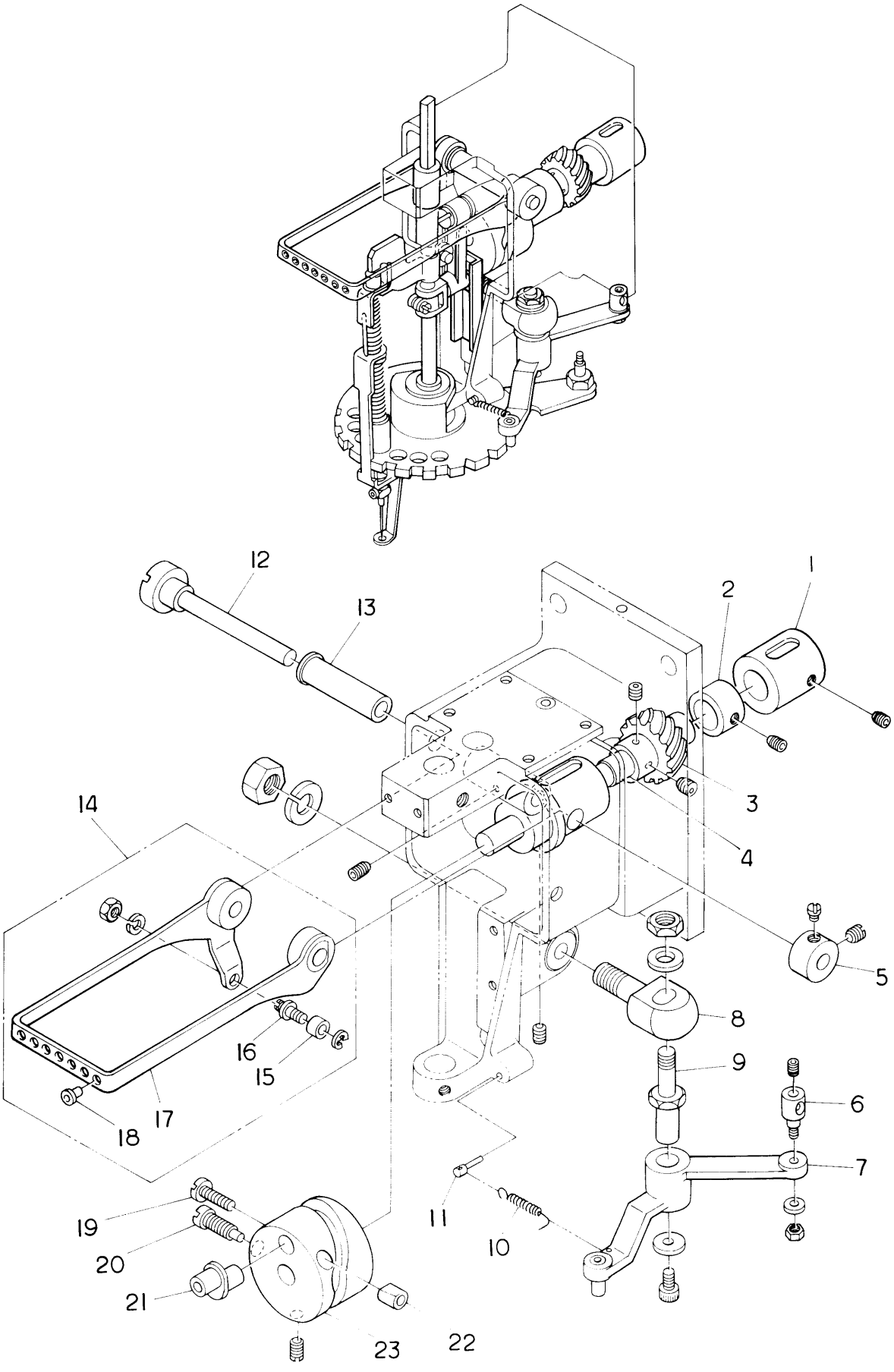

③ TAKE UP LEVER MECHANISM III (7 NEEDLES)

NO.	PARTS NO.	DESCRIPTION	REMARKS
1	23C6P00	REAR BUSH	
2	23D2P00	COLLAR	
3	23C5P00	HELICAL GEAR SHAFT	
4	23C8P00	ARM SHAFT	
5	2355F	RETAINING COLLAR	
6	2364F	LOCK BAR POSITIONING CLAMP	
7	2361G	LOCK LEVER	
8	2365F	LOCK LEVER BRACKET	
9	2363F	THREADED STUD	
10	2366F	LOCK LEVER SPRING	
11	2367F	LOCK LEVER SPRING PIN	
12	2351F	TAKE UP LEVER SHAFT	
13	2352F	TAKE UP SPINDLE BUSH	
14	2303G	TAKE UP LEVER ASSY COMPLETE	
15	2353F	ROLLER TAKE UP LEXER CAM	
16	2354F	STUD	
17	2349G	TAKE UP LEVER	
18	2358F	TAKE UP LEVER CERAMIC GUIDE	
19		SCREW (SM3 16MT32)	
20	2342F	LOCATING SCREW	
21	2343F	90° CRANK PIN	
22	2344F	RETAINING PIN	
23	2341F	TAKE UP LEVER CAM	
24	23C7P00	FRONT BUSH	

④ SEWING HEAD MECHANISM

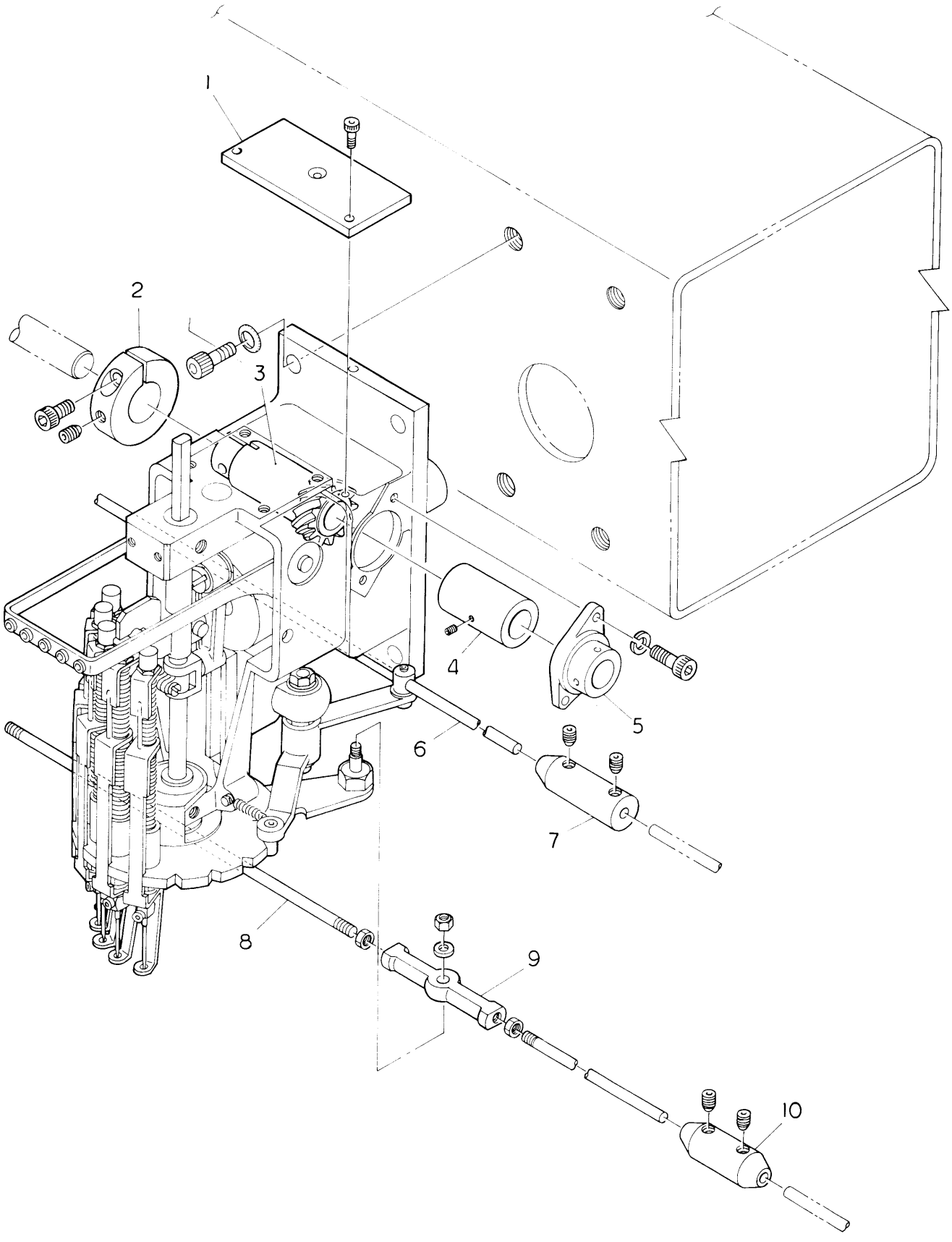

④ SEWING HEAD MECHANISM

NO.	PARTS NO.	DESCRIPTION	REMARKS
1	2560P00	TOP COVER	
2	3252F	GEAR CLAMP (3252F)	
3	32A0P00	GANG SHAFT (32A0P00)	
4	3228H	COLLAR	
5	91145	GANG SHAFT BEARING CASE UFL 002	
6		LOCK BAR	
7	3339F	LOCK BAR ROD HAND GRIP	
8		COLOUR CHANGE TURRET ROD	
9		PIVOT COUPLING RD4 020	
10	3338F	COLOUR CHANGE TURRET ROD HAND GRIP	

⑤ JUMP STITCH MECHANISM

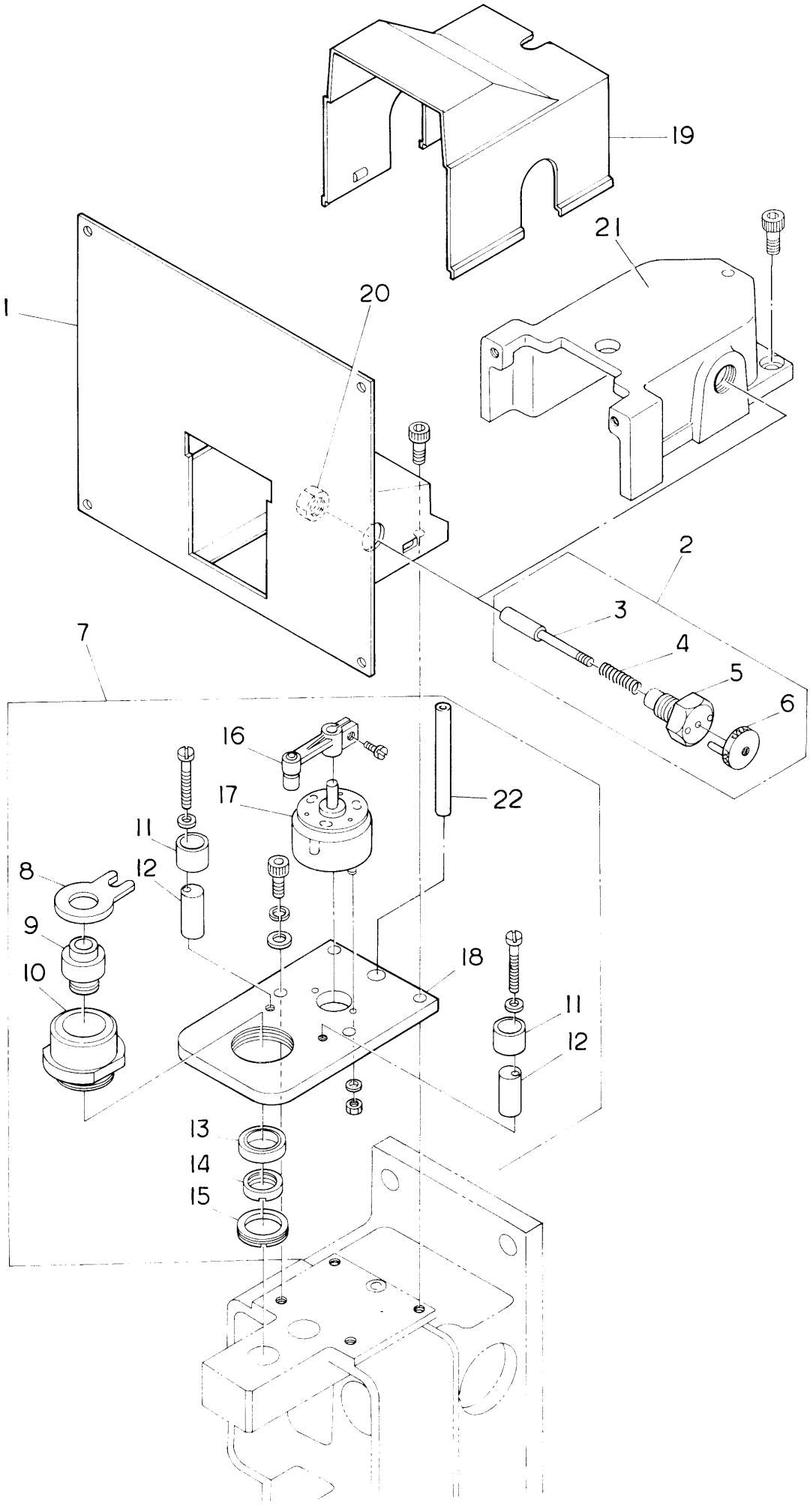

⑤ JUMP STITCH MECHANISM

NO.	PARTS NO.	DESCRIPTION	REMARKS
1	24B3P00	JUMP STITCH MECHANISM BASE (24B3P00 5 NEEDLES)	
	24B4P00	JUMP STITCH MECHANISM BASE (24B4P00 7 NEEDLES)	
2	2403F	HEAD ISOLATER ASSY COMPLETE	
3	2453F	HEAD ISOLATER ACTUATING PIN	
4	2456F	SPRING	
5	2455F	ISOLATER PIN RETAINING BOLT	
6	2452F	CLUTCH RELEASE PIN	
7		JUMP STITCH MECHANISM COMPLETE	
8	2443F	ACTUATING LEVER	
9	2444F	BUSH	
10	2445F	GUIDE BUSH	
11	2449F	NYLON STOP	
12	2448F	ADJUSTABLE ECCENTRIC FOR STOP	
13	91009	BALL RACE A2015	
14	2447F	RING NUT	
15	2446F	RING NUT	
16	2442F	JUMPING ROTARY LEVER	
17	2461F	ROTARY SOLENOID	
18	23D3P00	SOLENOID BRACKET BASE	
19	24C1P00	JUMP STITCH MECHANISM COVER	
20		HEAD ISOLATER NUT (M12)	
21	2451HJ	JUMP STITCH MECHANISM COVER (3 NEEDLES)	
22	2406P00	OIL PIPE (FRONT)	

⑥ THREAD GUIDE MECHANISM I (3 NEEDLES)

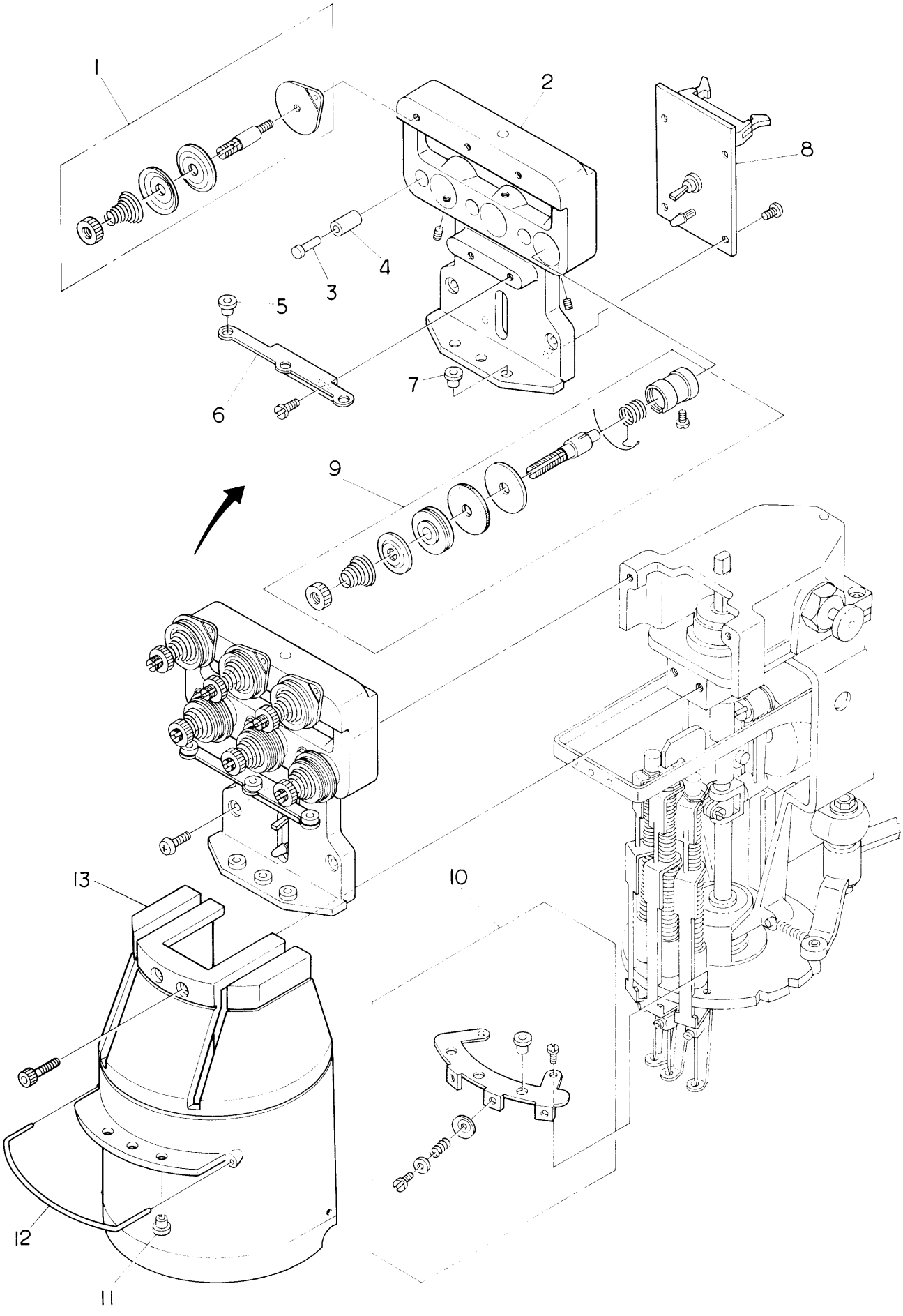

⑥ THREAD GUIDE MECHANISM I (3 NEEDLES)

NO.	PARTS NO.	DESCRIPTION	REMARKS
1	2406F	UPPEF TENSION UNIT COMPLETE	
2	2412C	THREAD TENSION ASSY BRACKET (3 NEEDLES)	
3	2431F	STOP MOTION CONTACT	
4	2432F	INSULATOR	
5	2491F	THREAD GUIDE CERAMIC	
6	2439F	TOP THREAD GUIDE BAR (3 NEEDLES)	
7	2491F	THREAD GUIDE CERAMIC	
8	55C0140	THREAD BREAK PCB	
9	2408F	LOWER TENSION UNIT COMPLETE	
10	2501F	THREAD END TRAP UNIT ASSY (3 NEEDLES)	
11	2493F	THREAD GUIDE CERAMIC	
12	2558P01	SEWING HEAD COVER THREAD GUIDE	
13	2568P00	SEWING HEAD COVER	

⑥ THREAD GUIDE MECHANISM II (5 NEEDLES)

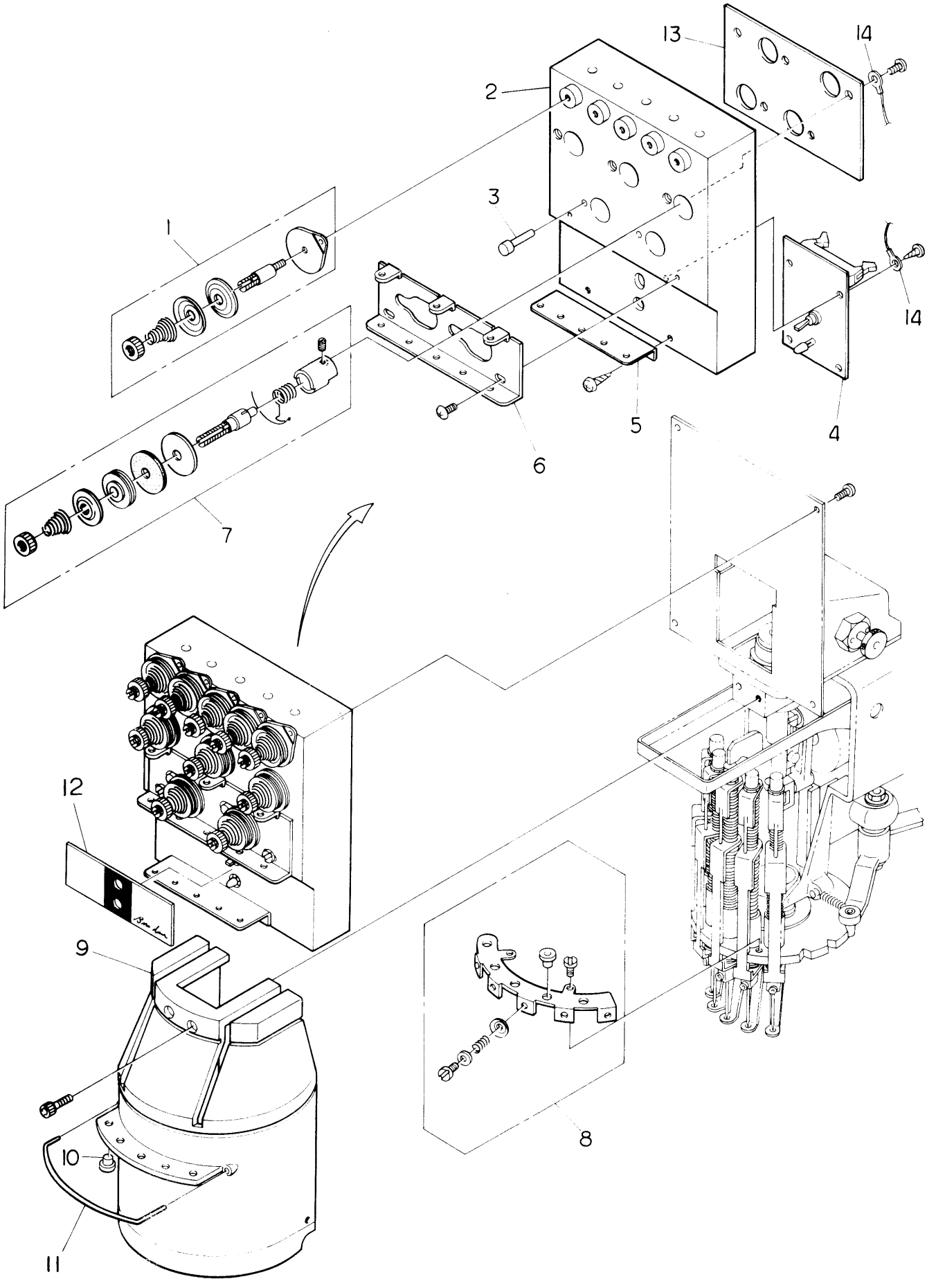

⑥ THREAD GUIDE MECHANISM II (5 NEEDLES)

NO.	PARTS NO.	DESCRIPTION	REMARKS
1	2406F	UPPER TENSION UNIT COMPLETE	
2	24B1P00	THREAD TENSION ASSY BRACKET	
3	24B6P00	STOP MOTION CONTACT	
4	5500140	THREAD BPEAK PCB	
5	24B9P00	SECOND THREAD GUIDE PLATE	
6	24B7P00	FIRST THREAD GUIDE PLATE	
7	24C2P00	LOWER TENSION UNIT COMPLETE	
8	2501F	THREAD END TRAP UNIT ASSY	
9	2562P00	SEWING HEAD COVER	
10	2493F	CERAMIC GUIDE	
11	2558P01	SEWING HEAD COVER THREAD GUIDE	
12	24E0P00	TENSION RABEL	
13	24D7P01	EARTH PLATE (5)	
14	24D9P00	EARTH CABLE	

⑥ THREAD GUIDE MECHANISM III (7 NEEDLES)

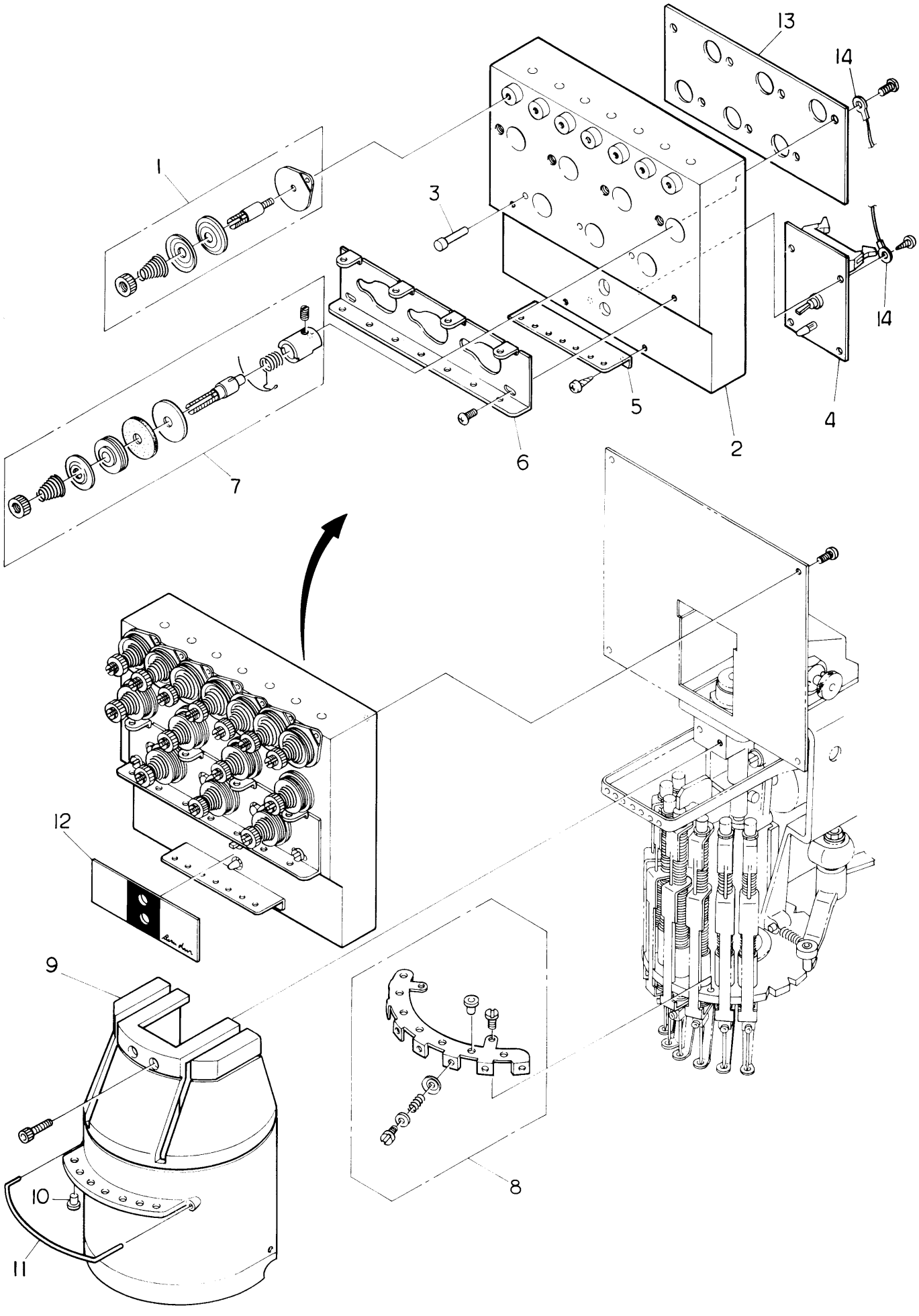

⑥ THREAD GUIDE MECHANISM III (7 NEEDLES)

NO.	PARTS NO.	DESCRIPTION	REMARKS
1	2406F	UPPER TENSION UNIT COMPLETE	
2	24B2P00	THREAD TENSION ASSY BRACKET	
3	24B6P00	STOP MOTION CONTACT	
4	5500140	THREAD BREAK PCB	
5	24C0P00	SECOND THREAD GUIDE PLATE	
6	24B8P00	FIRST THREAD GUIDE PLATE	
7	24C2P00	LOWER TENTION UNIT COMPLETE	
8	2501G	THREAD END TRAP UNIT ASSY	
9	2512P00	SEWING HEAD COVER	
10	2493F	CERAMIC GUIDE	
11	2558P01	SEWING HEAD COVER THREAD GUIDE	
12	24E0P00	TENSION RABEL	
13	24D8P01	EARTH PLATE (7)	
14	24D9P00	EARTH CABLE	

⑦ COLOR CHANGE MECHANISM I

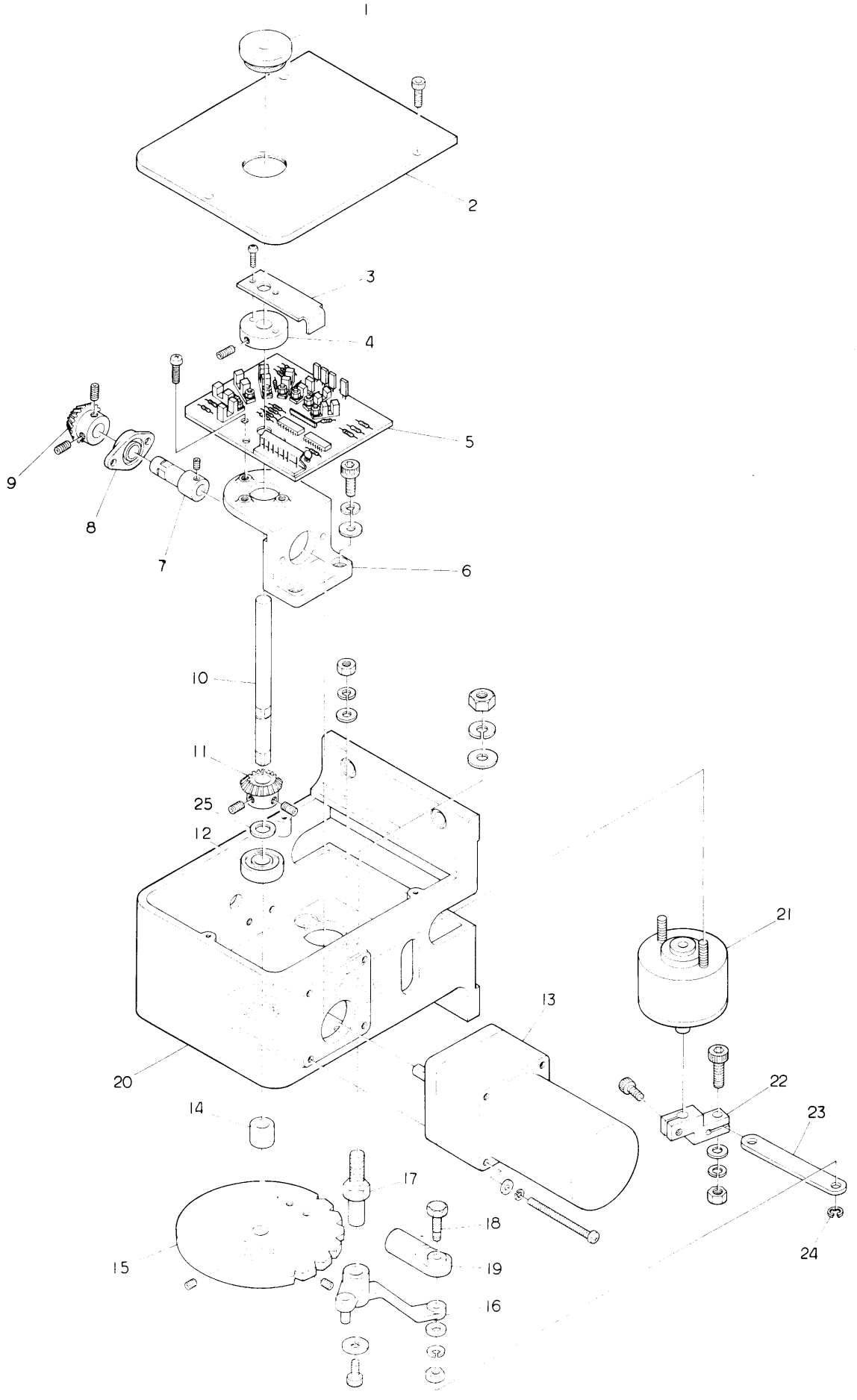

⑦ COLOR CHANGE MECHANISM 1

NO.	PARTS NO.	DESCRIPTION	REMARKS
1	3374H	BUSH	
2	33G3P00	COLOR CHANGE ASSY BASE COVER	
3	3328C	COLOR CHANGE CONFIRMATION LEVER	
4	3317C	COLLAR	
5	55C0170	3441 NEEDLE POSITION SENSOR UNIT (5 NEEDLES)	
	55C0180	3740 NEEDLE POSITION SENSOR UNIT (7 NEEDLES)	
6	33F1P00	COLOR CHANGE DRIVE BASE	
7	33F7P00	GEARED MOTOR SHAFT	
8	91149	FYH OIL LESS PILLOW 80 (80FL 10)	
9	3362H	BEVEL GEAR	
10	33F8P00	NEEDLE TURNING SHAFT	
11	3362H	BEVEL GEAR	
12	91001	COLLAR 6000ZZ	
13	3331H	GEARED MOTOR RM F6A5PC3AS-180	
14	33F9P00	COLLAR	
15	3315H	COLOR CHANGE TURRET	
16	33F4P00	LOCK LEVER	
17	2363F	THREADED PIVOT STUD	
18	33F6P00	THREADED STUD	
19		UNIBALL COUPLING CRB6	
20	33F0P00	COLOR CHANGE ASSY BASE	
21	3385C	ROTARY SOLENOID	
22	33F5P00	LOCK SOLENOID LEVER	
23	33G0P00	LINK LOCK LEVER	
24		E RING	
25		BUSH TW 1530	

⑦ COLOR CHANGE MECHANISM II

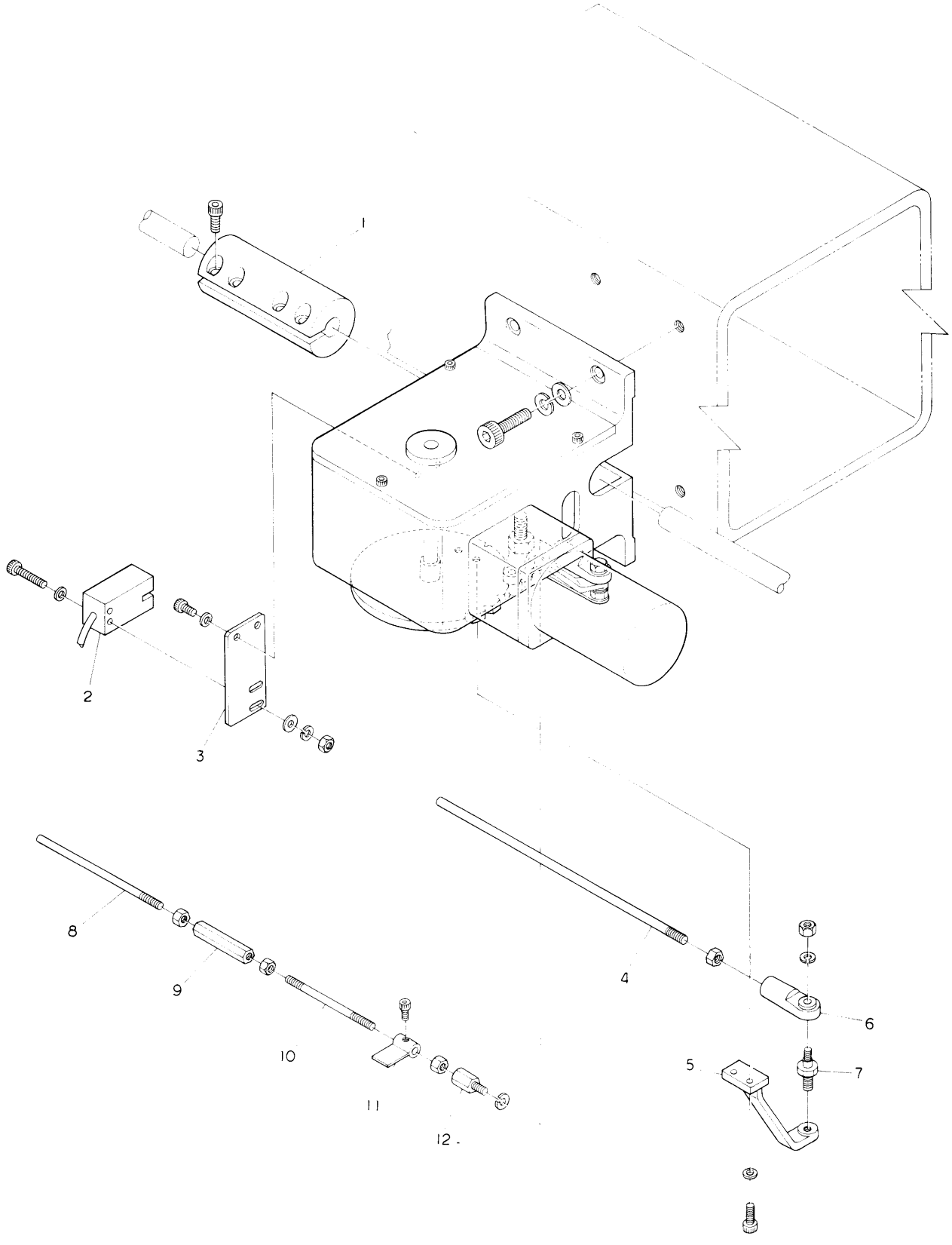

⑦ COLOR CHANGE MECHANISM II

NO.	PARTS NO.	DESCRIPTION	REMARKS
1	3255H	COUPLING	
2		SENSOR TLPP 24	
3	33G2P00	TLPP 24 SENSOR BRACKET	
4		COLOR CHANGE TURRET CONNECTING ROD	
5	33F2P00	COLOR CHANGE LEVER	
6		UNIBALL JOINT	
7	23D4P00	JOINT PIN	
8		LOCK SOLENOID CONNECTING ROD	
9	3377H	HEXAGON CONNECTING ROD COUPLING	
10		LOCK SOLENOID CONNECTING ROD	
11	33G4P00	LOCK CONFIRMATION LEVER	
12	33G1P00	HEXAGON CONNECTING ROD COUPLING	

⑧ DRIVE MECHANISM I

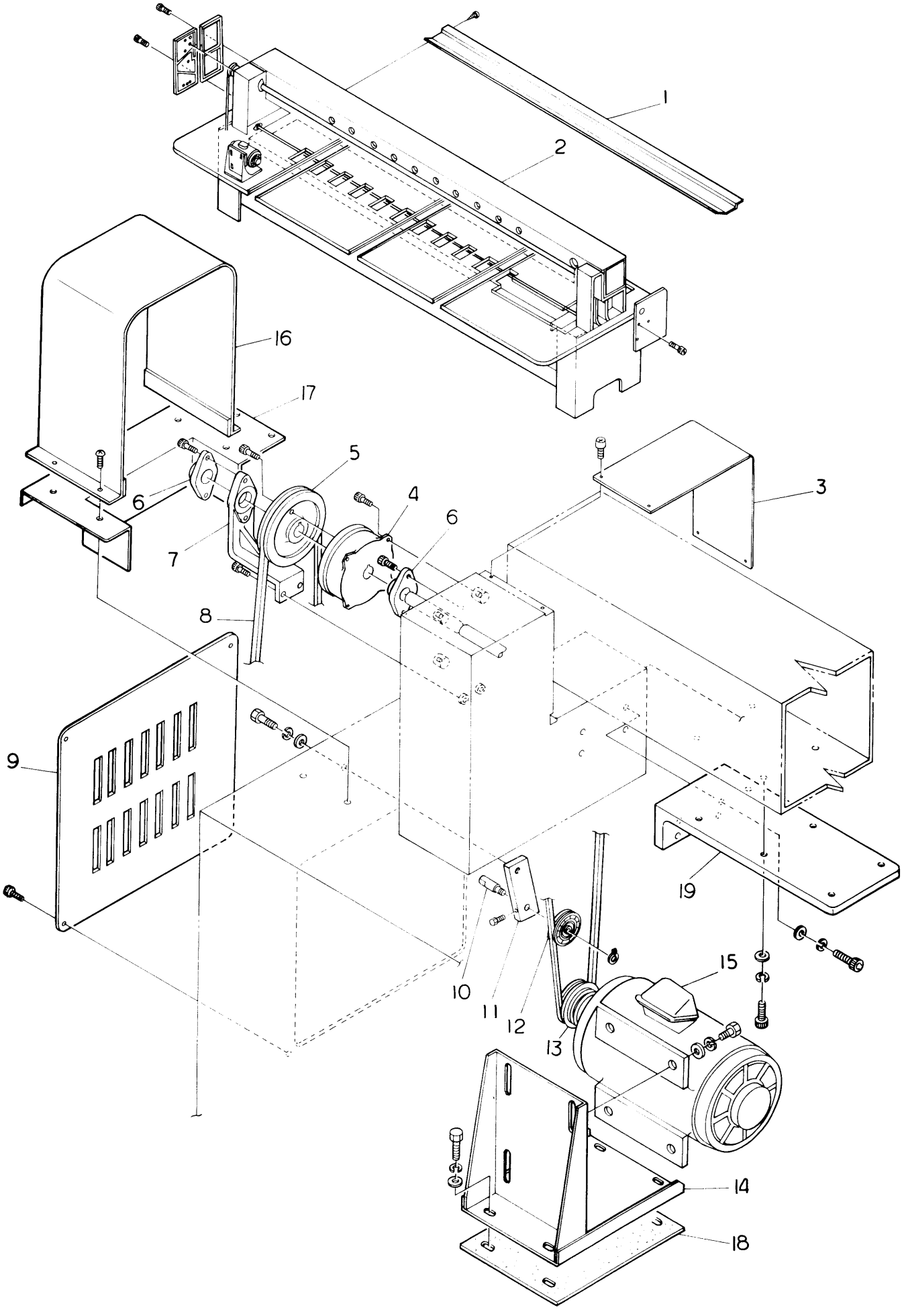

⑧ DRIVE MECHANISM I

NO.	PARTS NO.	DESCRIPTION	REMARKS
1	1300P00	OIL GUTTER	
2		BRIDGE	
3	1301P00	BRIDGE COVER	
4	31W7H	BRAKE UNIT JB 5	
5	31X9P00	DRIVE PULLEY	
6	91148	BEARING CASE UFL004	
7	31X7P00	GEAR BOX L BASE	
8	92061	V BELT (3V 630)	
9	1640P00	MACHINE FRAME SIDE COVER	
10	31Y3P00	BELT SHAFT	
11	31U2H	IDLE PULLEY BASE	
12	31Y8P00	V IDLER	
13	31Y0P01	MOTOR PULLEY (SRH3P50 60HZ)	
	31Z3P00	MOTOR PULLEY (SRH1P50 60HZ)	
	31Z2Y00	MOTOR PULLEY (XH3P50 60HZ)	
	31S4C	MOTOR PULLEY (XH1P50 60HZ)	
14	31Y4P00	MOTOR BASE	
15	3111C	MOTOR (THREE PHASE)	
	3112C	MOTOR (SINGLE PHASE)	
16	31Y6P00	BELT COVER	
17	31Y5P00	BELT COVER BASE	
18	1601P00	SHOCK ABSORBING RUBBER	
19	1302P01	CHANNEL HOLDER	

⑧ DRIVE MECHANISM II

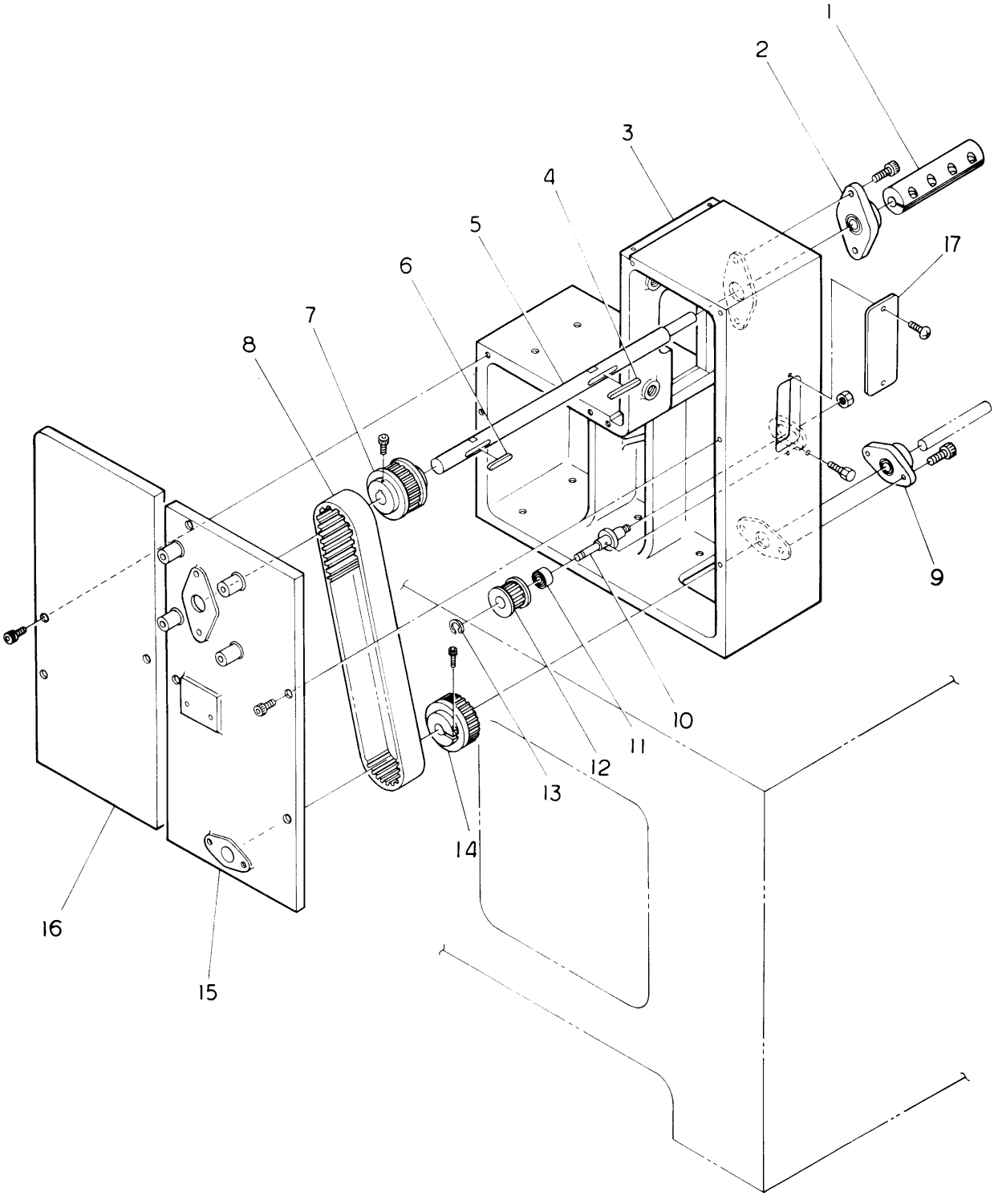

⑧ DRIVE MECHANISM II

NO.	PARTS NO.	DESCRIPTION	REMARKS
1	3255H	COUPLING	
2	91148	FLANGED BEARING UFL004	
3	31X6P00	REAR GEAR BOX	
4	31Z0P00	KEY	
5	31Y2P00	REAR GEAR BOX SHAFT	
6	31Y9P00	KEY 6×6×32	
7	31X8P00	TIMING PULLEY (GEAR BOX L UPPER)	
8	92092	TIMING BELT 300L100	
9	91145	FLANGED BEARING UFL002	
10	31Y1P00	IDLER SHAFT	
11	91005	BEARING 628ZZ	
12	31G1D	IDLER TIMING PULLEY 14L100	
13		E RING E 7	
14	3179H	TIMING PULLEY	
15	31X5P00	GEAR BOX L BEARING PLATE	
16	31X4P00	GEAR BOX COVER L	
17	31Z9P00	GEAR BOX FRONT COVER (L)	

⑧ DRIVE MECHANISM III

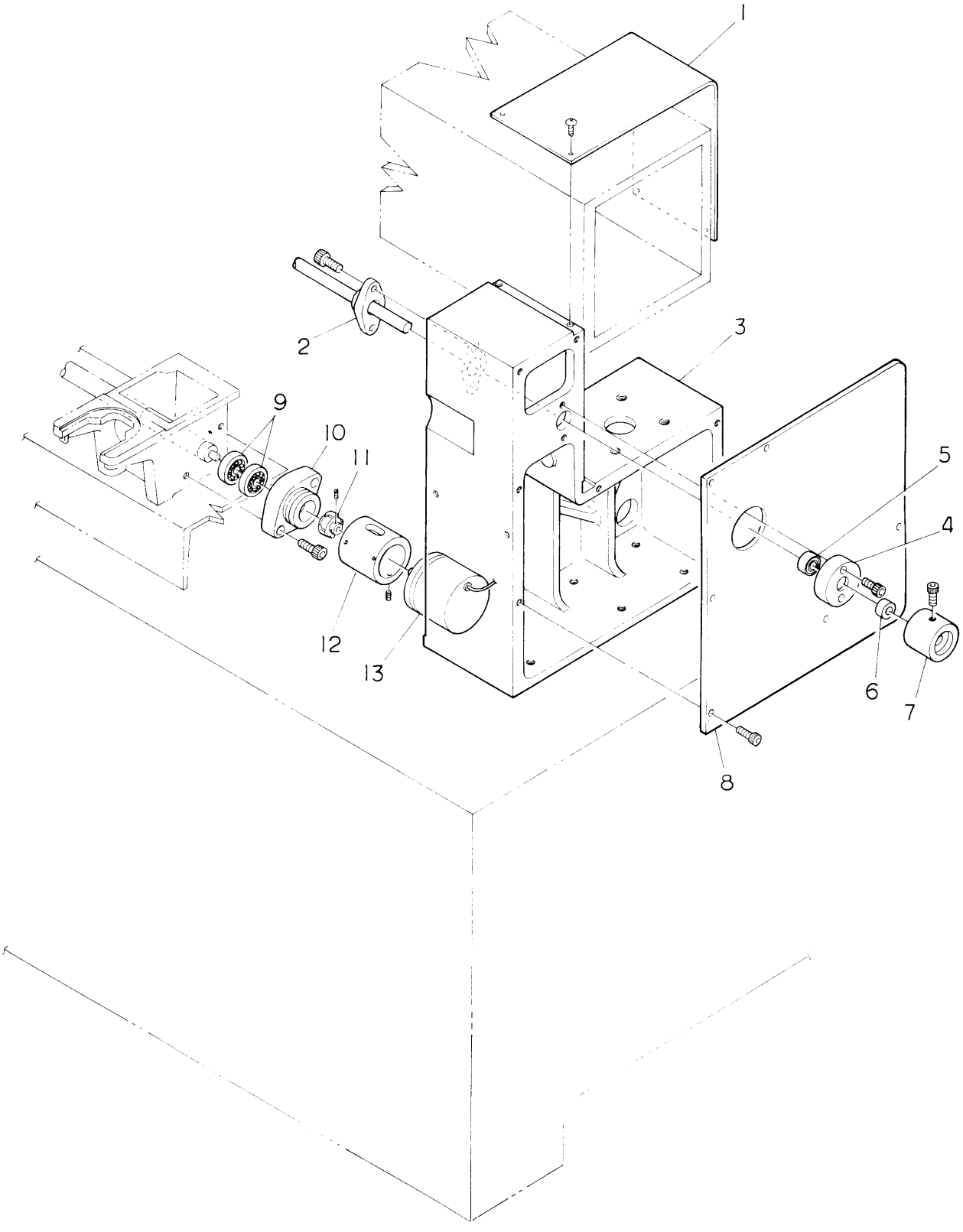

⑧ DRIVE MECHANISM III

NO.	PARTS NO.	DESCRIPTION	REMARKS
1	1301P00	BRIDGE COVER	
2	91145	FLANGED BEARING UFL 002	
3	31X0P00	GEAR BOX R	
4	31X2P00	HAND PULLEY COLLAR	
5	91007	BEARING 6002ZZ	
6	31X3P00	HAND PULLEY POSITIONING COLLAR	
7	3259H	HAND PULLEY	
8	31X1P00	GEAR BOX COVER R	
9	91007	BEARING 6002 ZZ	
10	51Q0P00	POSITION CODER HOLDER	
11	5124C	CODER COUPLING ML-27-6	
12	3182H	POSITION CODER COLLAR	
13	5121C	POSITION CODER	

⑨ PANTOGRAPH DRIVE MECHANISM I

18

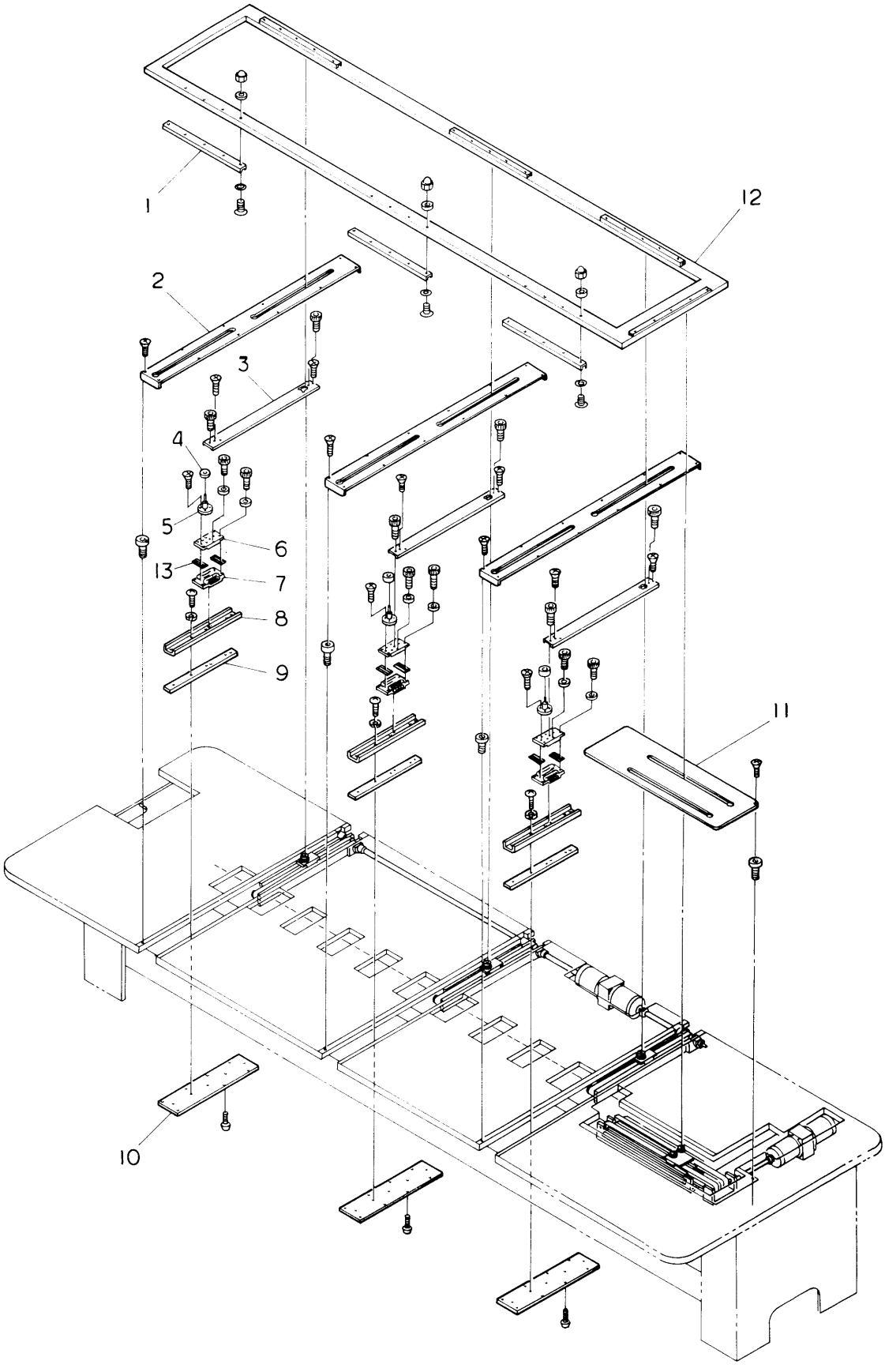

⑨ PANTOGRAPH DRIVE MECHANISM I

NO.	PARTS NO.	DESCRIPTION	REMARKS
1	4835N00	PANTOGRAPH BEARING MOUNT HOLDER	
2	4815H	H CENTER GUIDE COVER	
3	4824H	H MEMBER CONNECTING CHANNEL	
4		PANTOGRAPH BEARING 625ZZ	
5	48K8H	PANTOGRAPH BEARING MOUNT	
6	48K5H	H SLIDE PACK BASE	
7	4831H	SLIDE PACK	
8	4834H	FBW3590 RAIL	
9	4829H	H CENTER GUIDE RAIL SPACER	
10	4828H	H CENTER GUIDE RAIL BASE	
11	48M0P	V GUIDE COVER	
12		PANTOGRAPH FRAME ASSY	
13	4765C	TIMING BELT RACK	

⑨ PANTOGRAPH DRIVE MECHANISM II (H DIRECTION)

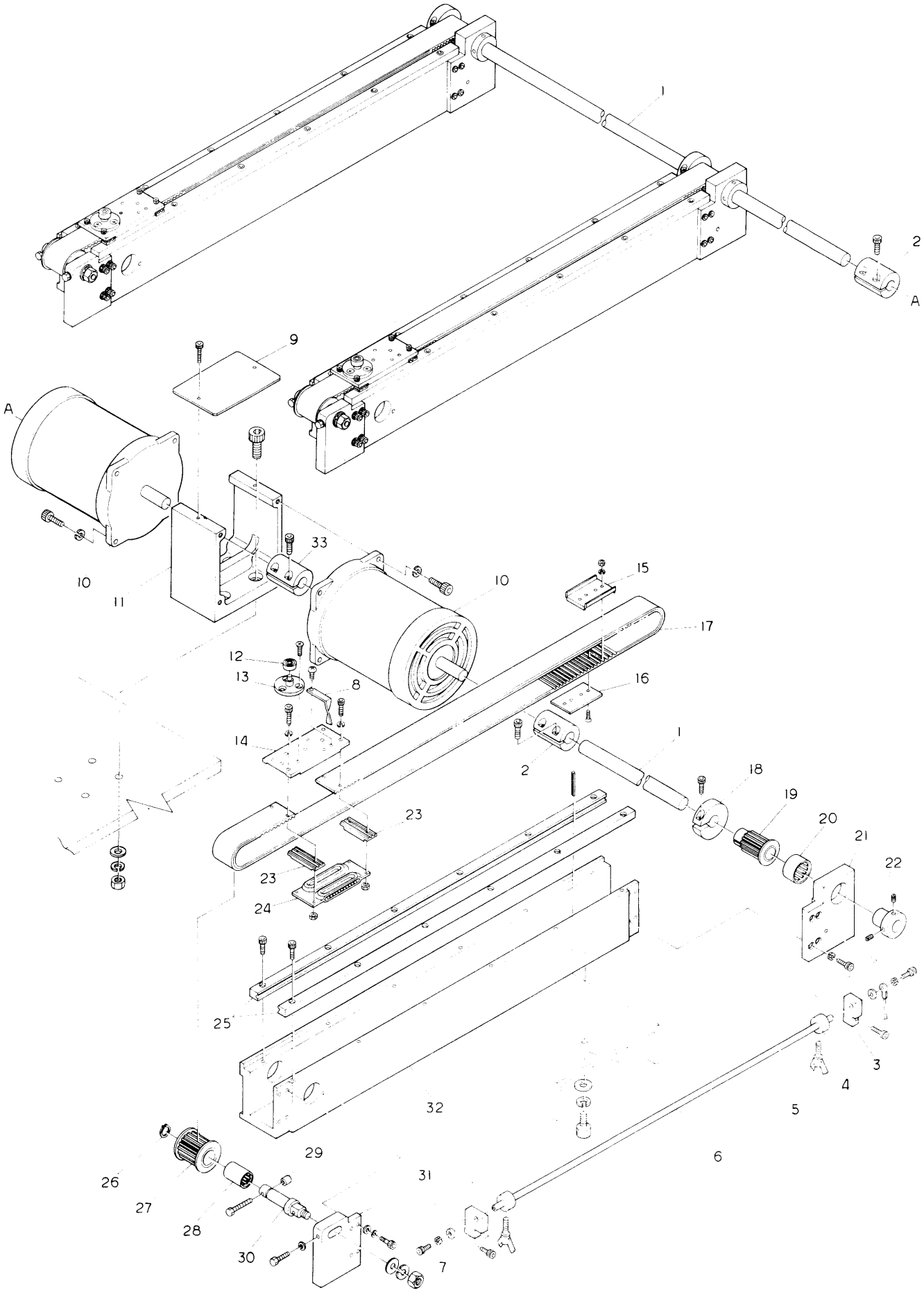

⑨ PANTOGRAPH DRIVE MECHANISM II (H DIRECTION)

NO.	PARTS NO.	DESCRIPTION	REMARKS
1		H PULSE MOTOR CONNECTING SHAFT	
2	4911P00	PULSE MOTOR COUPLING	
3	4519C	PANTOGRAPH STOPPER MOUNTING PLATE L	
4	4547C	PANTOGRAPH STOP COLLAR	
5		STOP COLLAR BOW SCREW	
6		PANTOGRAPH STOPPER SHAFT	
7	45001H0	PANTOGRAPH STOPPER MOUNTING PLATE R	
8	45006H0	PANTOGRAPH STOP SENSOR PLATE	
9	48J4H	PULSE MOTOR BRACKET COVER	
10	48J0H	PULSE MOTOR	
11	48J1H	PULSE MOTOR BRACKET	
12		PANTOGRAPH BEARING 625ZZ	
13	48K8H	PANTOGRAPH BEARING MOUNT	
14	48K5H	H SLIDE PACK BASE	
15	48K3H	TIMING BELT CONNECTING METAL FITTINGS No.1	
16	48K4H	TIMING BELT CONNECTING METAL FITTINGS No.2	
17	92088	TIMING BELT	
18	48J8H	PULLY CLAMP	
19	48J6H	PANTOGRAPH DRIVE PULLEY (REAR)	
20	91163	NEEDLE BEARING TLA 2016Z	
21	48K1H	H GUIDE REAR PULLEY BRACKET	
22	48J7H	PULSE MOTOR CONNECTING SHAFT COLLAR	
23	48K7H	TIMING BELT RACK	
24	4831H	SLIDE PACK	
25	4846H	FRAME LIMIT RAIL	
26		STOPPER E 10	
27	48J5H	PANTOGRAPH DRIVE PULLEY (FRONT)	
28		NEEDLE BEARING TA1225	
29	48L1H	PULLEY SHAFT BOLT CAP	
30	48J9H01	PANTOGRAPH DRIVE PULLEY SHAFT FRONT	
31	48K0H	H GUIDE FRONT PULLEY BRACKET	
32	48K9H	H GUIDE RAIL BASE	
33	4911P00	PULES MOTOR COUPLING	

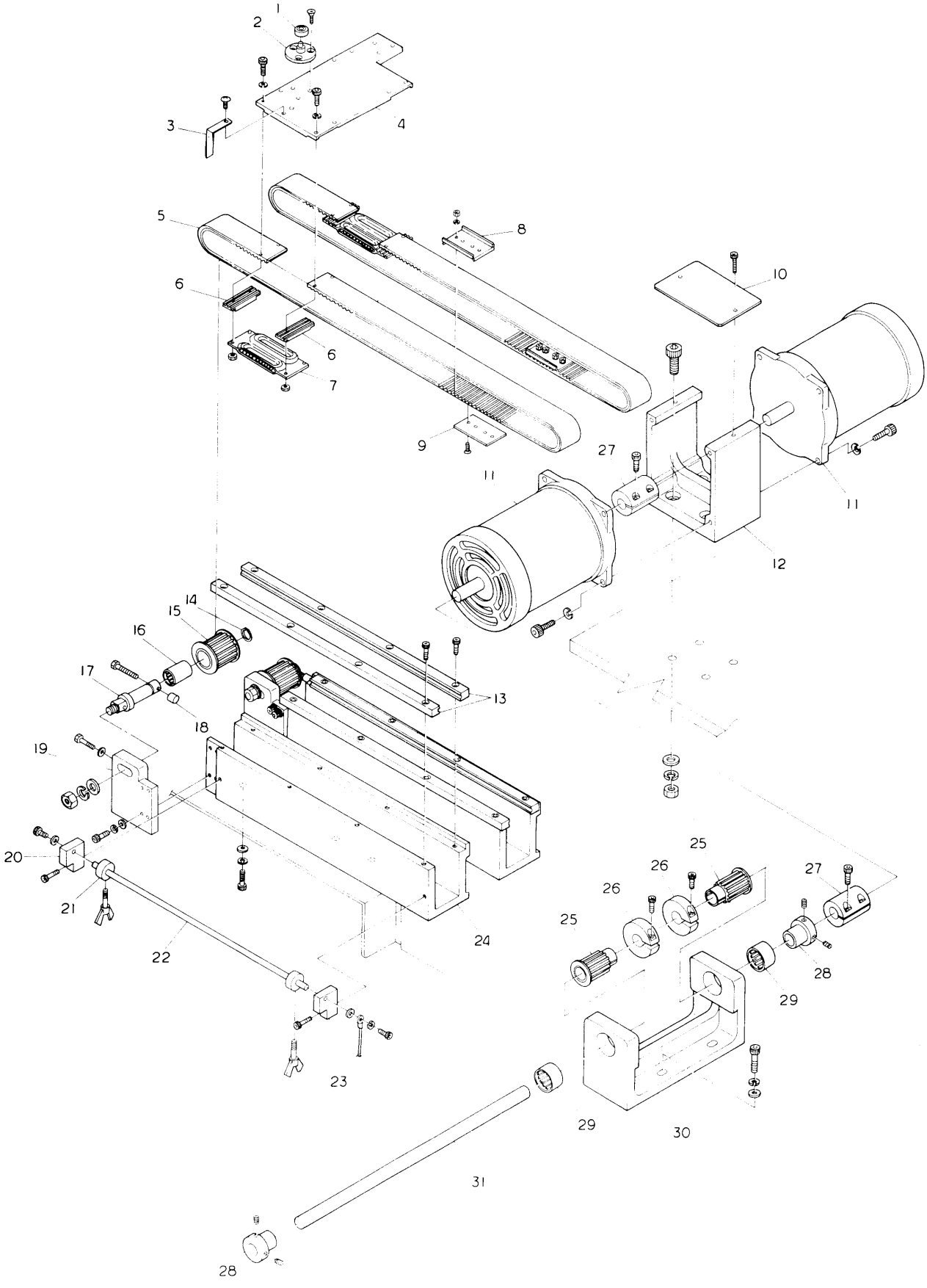
1
2
3
4
5
6
6
7
8
9
10
11
11
12
13
14
15
16
17
18
19
20
21
22
23
24
25
25
26
26
27
27
28
28
29
29
30
31

⑨ PANTOGRAPH DRIVE MECHANISM III (V EIRECTION)

NO.	PARTS NO.	DESCRIPTION	REMARKS
1		PANTOGRAPH BEARING 625 ZZ	
2	48K8H	PANTOGRAPH BEARING MOUNT	
3	45006H0	PANTOGRAPH STOP SENSOR PLATE	
4	4901P00	V SLIDE PACK BASE	
5	92088	TIMING BELT	
6	48K7H	TIMING BELT RACK	
7	4831H	SLIDE PACK	
8	48K3H	BELT CONNECTING METAL FITTINGS No.1	
9	48K4H	BELT CONNECTING METAL FITTINGS No.2	
10	48J4H	PULSE MOTOR BRACKET COVER	
11	48J0H	PULSE MOTOR	
12	48J2H	PULSE MOTOR BRACKET	
13	4846H	FRAME LIMIT RAIL	
14		STOPPER E 10	
15	48J5H	PANTOGRAPH DRIVE PULLEY (FRONT)	
16		NEEDLE BEARING TA 1225	
17	48J9H01	PANTOGRAPH DRIVE PULLEY SHAFT	
18	48L1H	PULLEY SHAFT BOLT CAP	
19	48K0H	H GUIDE FRONT PULLEY BRACKET	
20	4518C	PANTOGRAPH STOPPER MOUNTING PLATE	
21	4547C	PANTOGRAPH STOP COLLAR	
22		PANTOGRAPH STOPPER SHAFT	
23	4519C	PANTOGRAPH STOPPER MOUNTING PLATE L	
24	48L0H	V GUIDE RAIL BASE	
25	48J6H	PANTOGRAPH DRIVE PULLEY (REAR)	
26	48J8H	PULLEY CLAMP	
27	48J3H	PULSE MOTOR COUPLING	
28	48J7H	PULSE MOTOR CONNECTING SHAFT COLLAR	
29	91163	NEEDLE BEARING TLA2016Z	
30	48K2H	V GUIDE RAIL BASE	
31	4900P00	VJPM CONNECTING SHAFT	

⑩ CONTROL SYSTEM I (SRH)

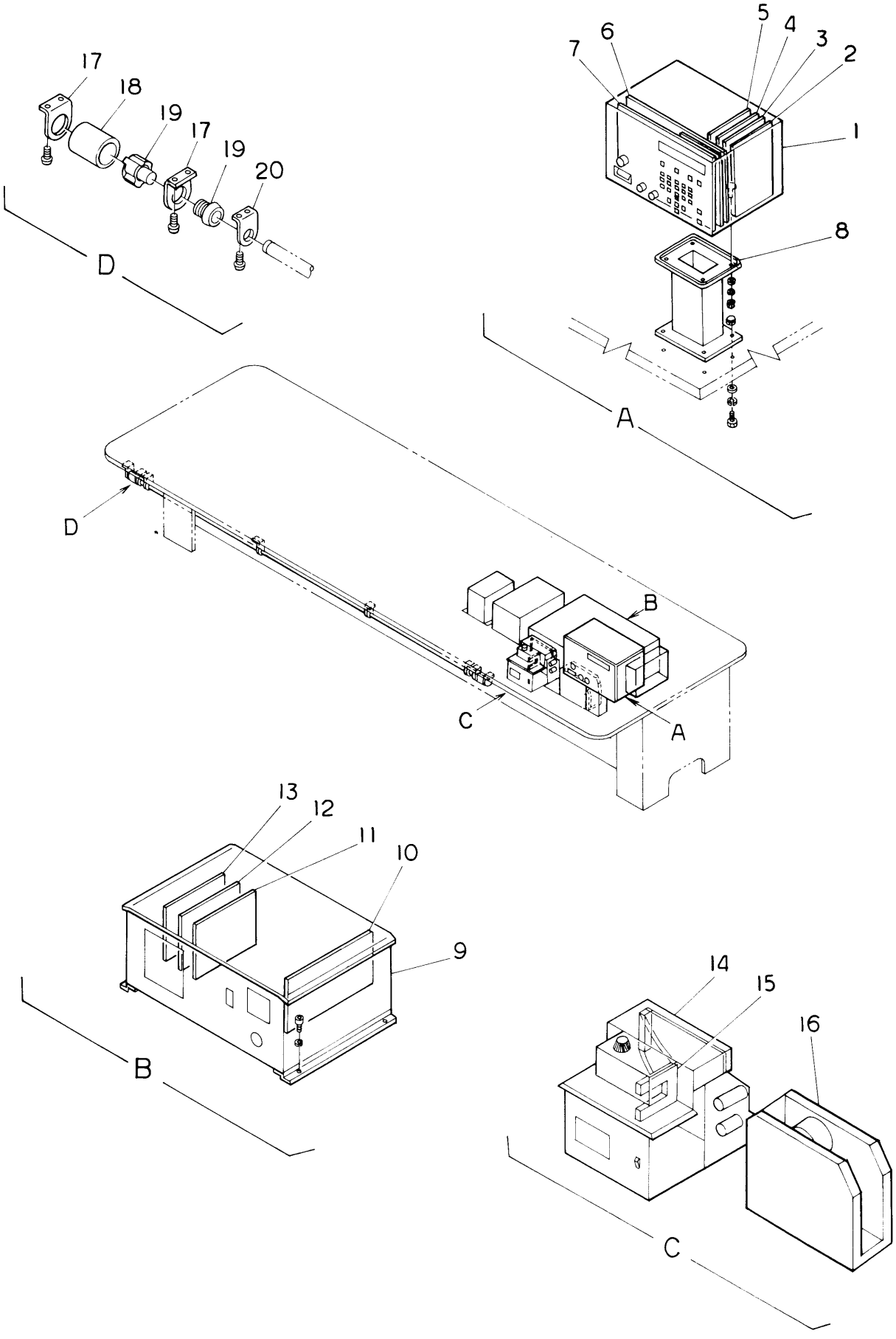

⑩ CONTROL SYSTEM I (SRH)

NO.	PARTS NO.	DESCRIPTION	REMARKS
1		BESR AUTOMAT	
2		MEMORY BOARD 3401	
3		MEMORY BOARD 3401	
4		CPU BOARD 3423	
5		INTERFACE BOARD 3435	
6		MOTHER BOARD 3502	
7		DISPLAY BOARD 3612	
8	5195H	AUTOMAT BASE	
9		BESR DRIVER BOX	
10		MACHINE CONTROL BOARD 3490	
11		PULSE MOTOR DRIVE BOARD 3470	
12		PULSE MOTOR DRIVE BOARD 3470	
13		PULSE MOTOR CONTROL BOARD 3461	
14		TAPE READER PTR 5	
15		READ SENSOR	
16		TAPE HOLDER	
17	5318F	BAR SWITCH BRACKET (LARGE)	
18	5315F	BAR SWITCH CAP	
19	5311F	BAR SWITCH 1A1B (RED)	
	5312F	BAR SWITCH BS 501 (GREEN)	
20	5319F	BAR SWITCH BRACKET (SMALL)	

⑩ CONTROL SYSTEM II (BEXH)

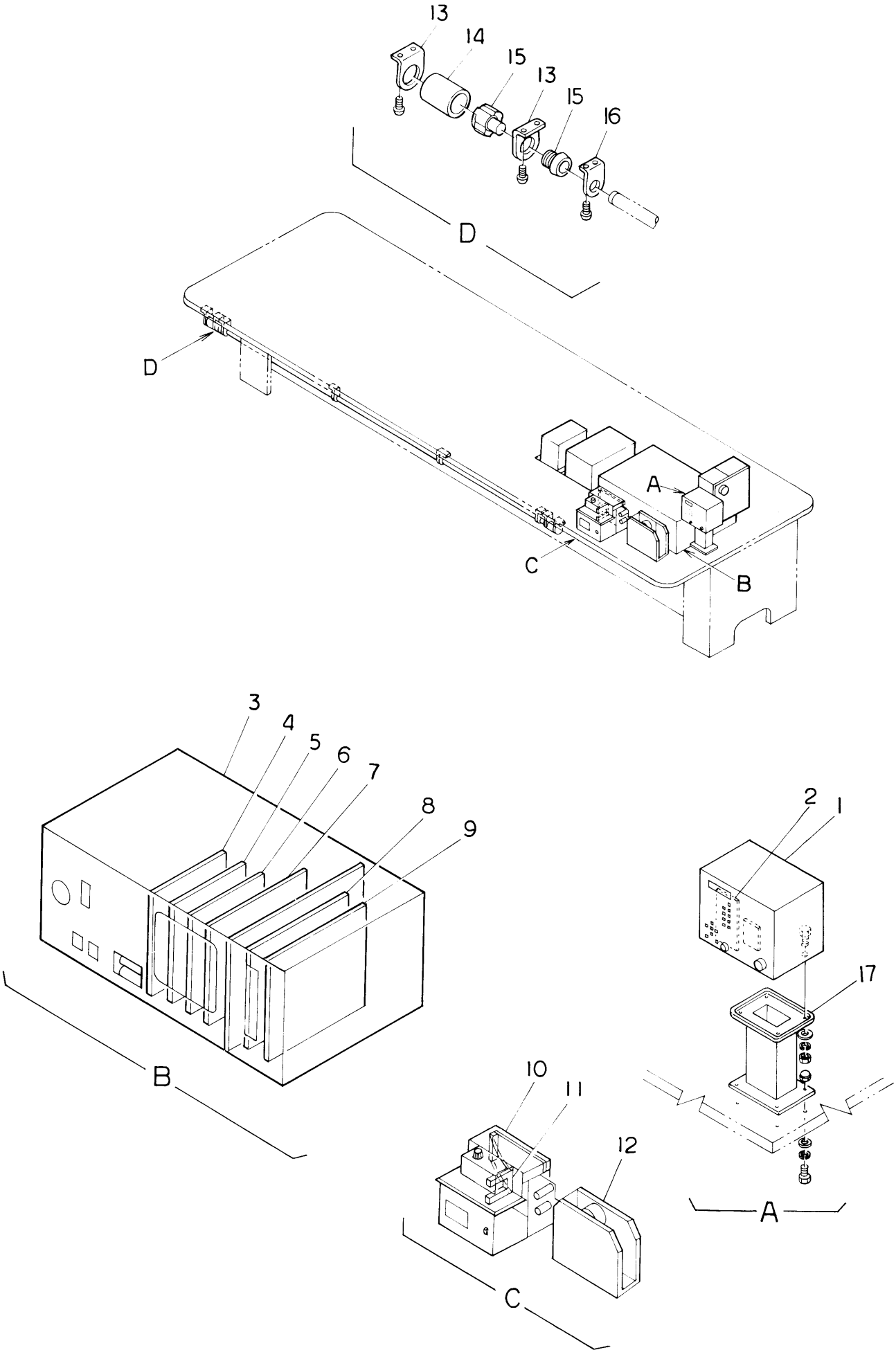

⑩ CONTROL SYSTEM II (BEXH)

NO.	PARTS NO.	DESCRIPTION	REMARKS
1		BEX AUTOMAT	
2		DISPLAY BOARD 4050	
3		BEX DRIVER BOX	
4		PULSE MOTOR DRIVE BOARD 3470	
5		PULSE MOTOR DRIVE BOARD 3470	
6		PULSE MOTOR CONTROL BOARD 3461	
7		MACHINE CONTROL BOARD 4040	
8		INTERFACE BOARD 4030	
9		CPU BOARD 4020	
10		TAPE READER PTR 5	
11		READ SENSOR	
12		TAPE HOLDER	
13	5318F	BAR SWITCH BRACKET (LARGE)	
14	5315F	BAR SWITCH CAP	
15	5311F	BAR SWITCH (RED)	
	5312F	BAR SWITCH (GREEN)	
16	5319F	BAR SWITCH BRACKET (SMALL)	
17	5195H	AUTOMAT BASE	

⑪ UNDERTHREAD STOP MOTION

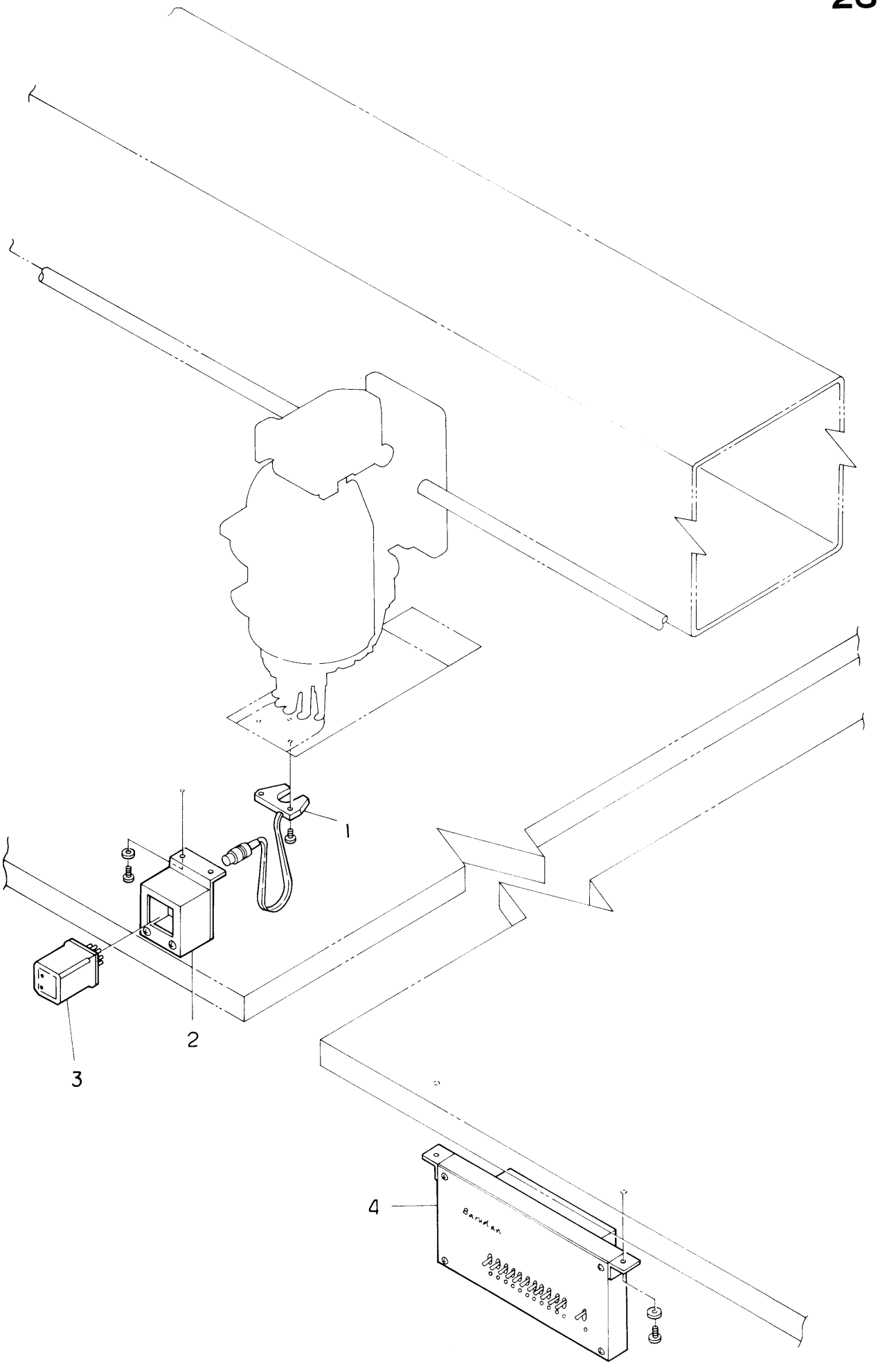

⑪ UNDERTHREAD STOP MOTION

NO.	PARTS NO.	DESCRIPTION	REMARKS
1	5411F	UTSM SENSOR	
2	5401F	UNDERTHREAD AMPLIFIER BRACKET	
3	5412F	UTSM AMPLIFIER	
4	5410C	CONTROL BOX UNDERTHREAD STOP MOTION	

⑫ THREAD STAND, LAMP, ETC.

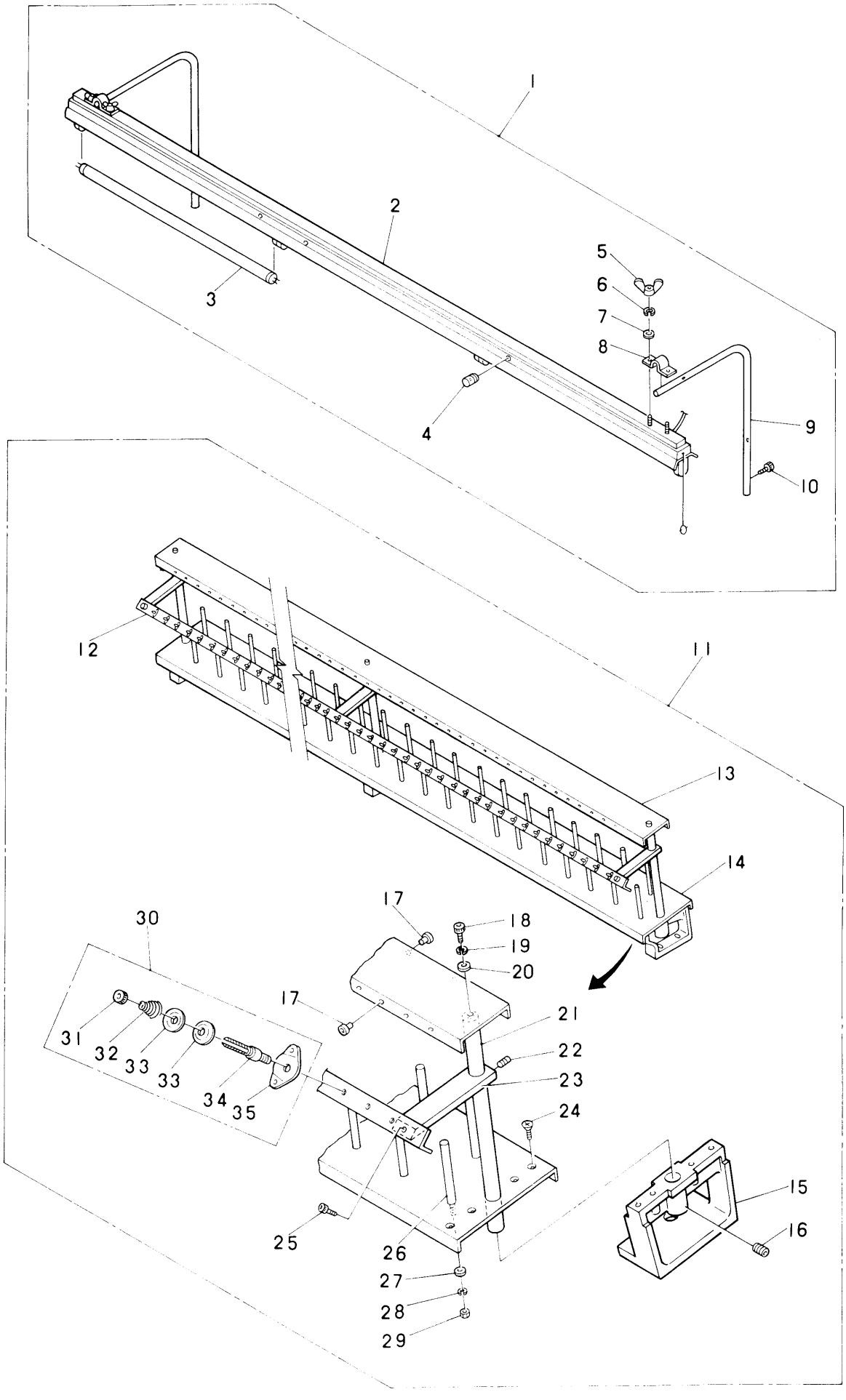

⑫ THREAD STAND, LAMP, ETC.

NO.	PARTS NO.	DESCRIPTION	REMARKS
1	7110H	FLUORESCENT LIGHT	
2	7112H	FLUORESCENT STAND	
3	7111F	FLUORESCENT LAMP	
4		STARTER	
5		NUT	
6		SPRING WASHER	
7		PLATE WASHER	
8	7118C	ARM FIXING METAL A	
9	7115F	ARM PIPE	
10		SCREW (M4)	
11	7101H	THREAD STAND UNIT	
12	7124H	THREAD GUIDE BAR	
13	7121H	UPPER COVER THREAD STAND	
14	7122H	BASE THREAD STAND	
15		THREAD STAND MOUNTING	
16		GRUB SCREW	
17	2493F	THREAD GUIDE CERAMIC	
18		SCREW (M6)	
19		SPRING WASHER	
20		PLATE WASHER	
21	7126C	THREAD STAND POST	
22		GRUB SCREW	
23	7127C	BRACKET AND ARM THREAD STAND	
24		SCREW (M4×0.7)	
25		SCREW (M5×0.8)	
26	7128H	THREAD CONE PIN	
27		WASHER	
28		SPRING WASHER	
29		NUT (M5×0.8)	
30	2405F	THREAD TENSION UNIT ASSY	
31	2471F	ADJUSTING NUT	
32	2435H	SPRING	
33	2425F	TENSION DISC	
34	2416F	THREAD STAND TENSION POST	
35	2421F	BACKING PLATE	

⑬ AUTOMATIC THREAD TRIMMING DEVICE I (OPTION)

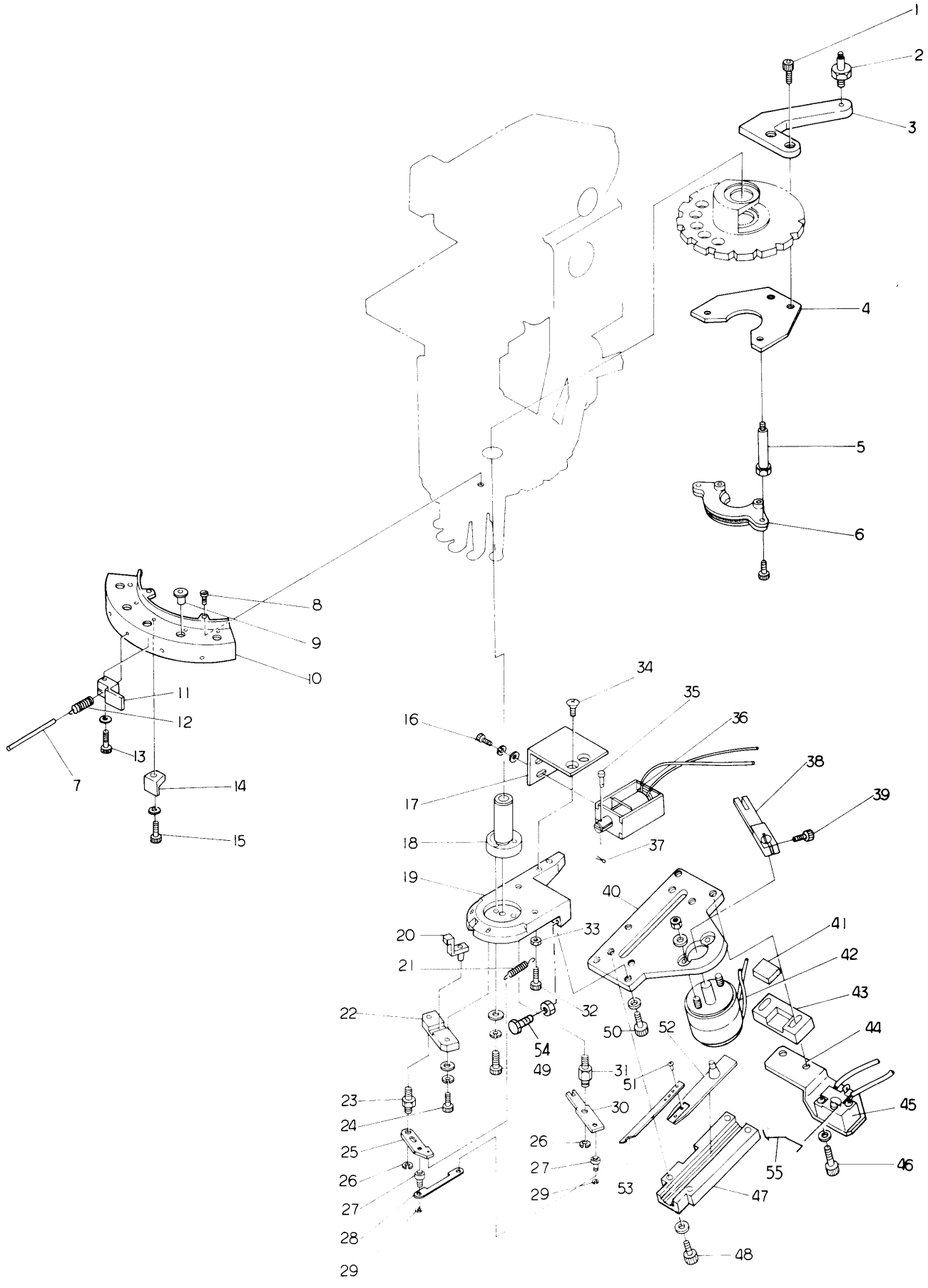

⑬ AUTOMATIC THREAD TRIMMING DEVICE I (OPTION)

NO.	PARTS NO.	DESCRIPTION	REMARKS
1		SCREW M4	
2	2720H	ROTARY PLATE JOINT PIN A	
3	2709H	ROTARY BOARD LEVER	
4	2715C01	SUPPORTER	
5	2716C	THREAD HOLDER POST	
6	2772C	THREAD HOLDER CMP	
7	2731C	THREAD KEEP PIN FOR 5 NEEDLE	
	2731G	THREAD KEEP PIN FOR 7 NEEDLE	
8		SCREW SM9 64 40	
9	2358F	CERAMIC THREAD GUIDE	
10	2728C	THREAD END TRAP FOR 5 NEEDLE	
	2728G	THREAD END TRAP FOR 7 NEEDLE	
11	2730C	THREAD KEEP CLAMP	
12	2727C01	KEEP SPRING	
13		SCREW M3	
14	2729C01	THREAD KEEP BLOCK	
15		SCREW M3	
16		SCREW M3	
17	2719C	BRACKET FOR SOL PLUNGER	
18	2701C	NEEDLE BAR DRIVER SHAFT BUSH	
19	2722C01	FIXING BASE	
20	2765C	SLIDER CMP	
21	2740C01	LEVER SPRING	
22	2703C	SLIDE BASE	
23	2705C	LEVER PIN	
24		SCREW M3	
25	2706C	LEVER	
26		E RING 3	
27	2707C	ROD PIN	
28	2718C	PLATE ROD	
29		E RING 2	
30	2717C	SECOND LEVER	
31	2708C	SECOND LEVER PIN	
32		SCREW M3	
33		NUT M3	
34		SCREW M4	
35	2710C	SOLENOID PIN	
36	95604	KEEP SOLENOID TDS K10SL	
37		DEVIDING PIN 0.8 L=6	
38	2723C01	THREAD KEEP LEVER	
39		SCERW M4	
40	2733C01	THREAD KEEP BASE	
41	2737C	STOP RUBBER	
42	95607	ROTARY SOLENOID 4ER67.5-34×3.8.9	
43	2736C	STOP BASE	

NO.	PARTS NO.	DESCRIPTION	REMARKS
44	2770C	SWITCH STAY	
45	95202	MICRO SWITCH D2MC 01F	
46		SCREW M4	
47	2735C01	THREAD KEEP HOOK GUIDE	
48		SCREW M4	
49		SCREW M4	
50		SCREW M4	
51		SCREW M2	
52	2734C01	THREAD KEEP HOOK FIXING BASE	
53	2711C	THREAD CATCHER LEVER	
54	2778C	SCREW FOR FIXING BASE	
55	95203	THREAD KEEP HOOK GUIDE LEVER	

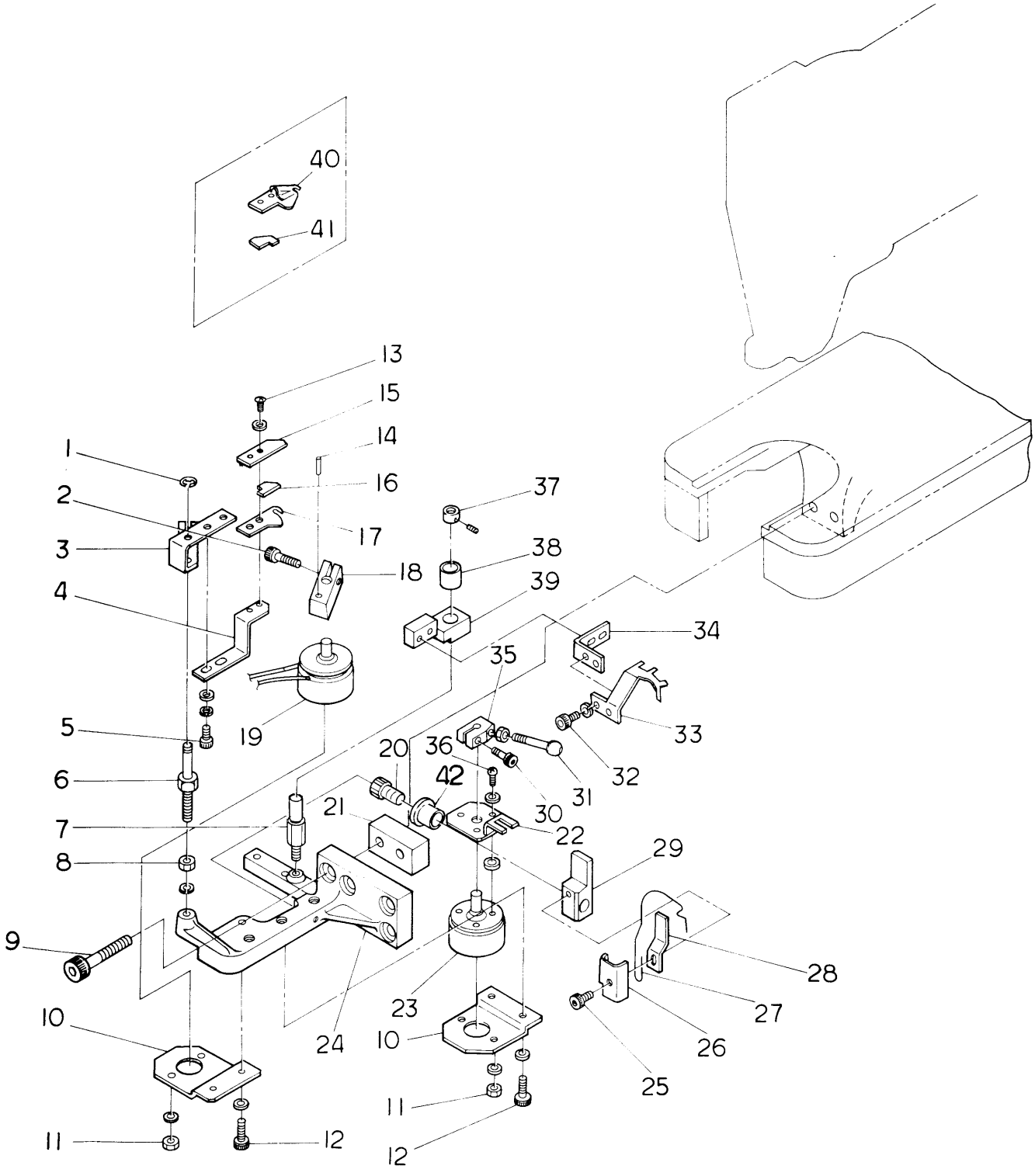
40
41
13
15
14
1
16
37
2
17
3
38
18
39
4
34
35
19
33
5
20
36
32
42
31
6
21
30
7
22
29
8
9
28
23
27
10
24
10
26
25
11
11
12
12

⑬ AUTOMATIC THREAD TRIMMING DEVICE II (OPTION)

NO.	PARTS NO.	DESCRIPTION	REMARKS
1		E RING 2.5	
2		SCREW M4	
3	2744C	TRIMMING LEVER	
4	2745C	FIXING STAY	
5		SCREW M3	
6	2743C	LEVER PIN A	
7	2750C01	LEVER PIN B	
8		NUT M4	
9		SCREW M6	
10	2748C01	SOLENOID STAY	
11		NUT M3	
12		SCREW M3	
13		SCREW M2	
14		PIN 3	
15	2747C	GUIDE UPPER	
16	2793C	KNIFE	
17	2746C	GUIDE LOWER	
18	2749C	SOLENOID LEVER A	
19	95605	ROTARY SOLENOID 3EL25×4.5	
20	2767C	GRUB SCREW M4	
21	2742C	FIXING WASHER FOR 5 NEEDLE	
	2742G	FIXING WASHER FOR 7 NEEDLE	
22	2756C	SOLENOID LEVER C	
23	95606	ROTARY SOLENOID 3ER25×46.9	
24	2741C	THREAD TRIMMING FIXING BASE	
25		SCREW M3	
26	2766C	HOOK FIXING STAY	
27	2759C02	THREAD PULLING HOOK	
28	2761C	PLATE SPRING B	
29	2758C	THREAD PULLING LEVER	
30		SCREW M4	
31	2755C01	PIN	
32		SCREW M3	
33	2753C01	THREAD DEVIDING HOOK	
34	2752C	THREAD DEVIDING FIX STAY	
35	2754C	SOLENOID LEVER B	
36		SCREW M2.6	
37	2792C	COLLAR	
38		BUSH MB0608DU	
39	2751C	THREAD DEVIDING LEVER	
40	2773C	GUIDE	
41	2774C	KNIFE	
42	2757C	BUSH COLLAR	