Barudan

COMPUTER MONOGRAM MACHINE

MODEL

BEAT 704 706 708

BEAT M704 M706 M708

PARTS LIST

V10014

BARUDAN CO., LTD.

ADDRESS 20-TSUKAGOSHI. JOSUIJI
ICHINOMIYA-CITY· AICHI-PREF·
JAPAN
TEL. (0586)76-1137
TELEX 4573268 BARUNA J
CABLE BARUNA ICHINOMIYA

BEAT－704・706・708
BEAT－M704・M706・M708

PARTS LIST

INDEX

ITEN No.	Page No.
①Machine layout	1
②Table-Frame	7
③Bed Assy	25
④Top shaft. Verticl shaft	27
⑤Needle bar-Take up lever mechanism Ⅰ (5)	29
⑤Needle bar-Take up lever mechanism Ⅰ (7)	31
⑥Needle bar-Take up lever mechanism Ⅱ (5)	33
⑥Needle bar-Take up lever mechanism Ⅱ (7)	35
⑦Color change mechanism	37
⑧Thread guide mechanism (5)	39
⑧Thread guide mechanism (7)	41
⑨Jamp mechanism	43
⑩Option	45
⑪Connecting rod mechanism	47
⑫Drive mechanism	49
⑬Pantograph drive mechanism Ⅰ	51
⑭Pantograph drive mechanism (H Direction) Ⅱ 320×520	57
⑭Pantograph drive mechanism (H Direction) Ⅱ 320×450・320×350	59
⑮Pantograph drive mechanism (V Direction) Ⅲ 320×520	61
⑯Control system Ⅰ	63
⑯Control system Ⅱ	65
⑰Thread cutting mechanism Ⅰ	67
⑱Thread cutting mechanism Ⅱ	69
⑲Thread cutting dive mechanism Ⅲ	71
INDEX	

① Machine layout (BEAT－704)

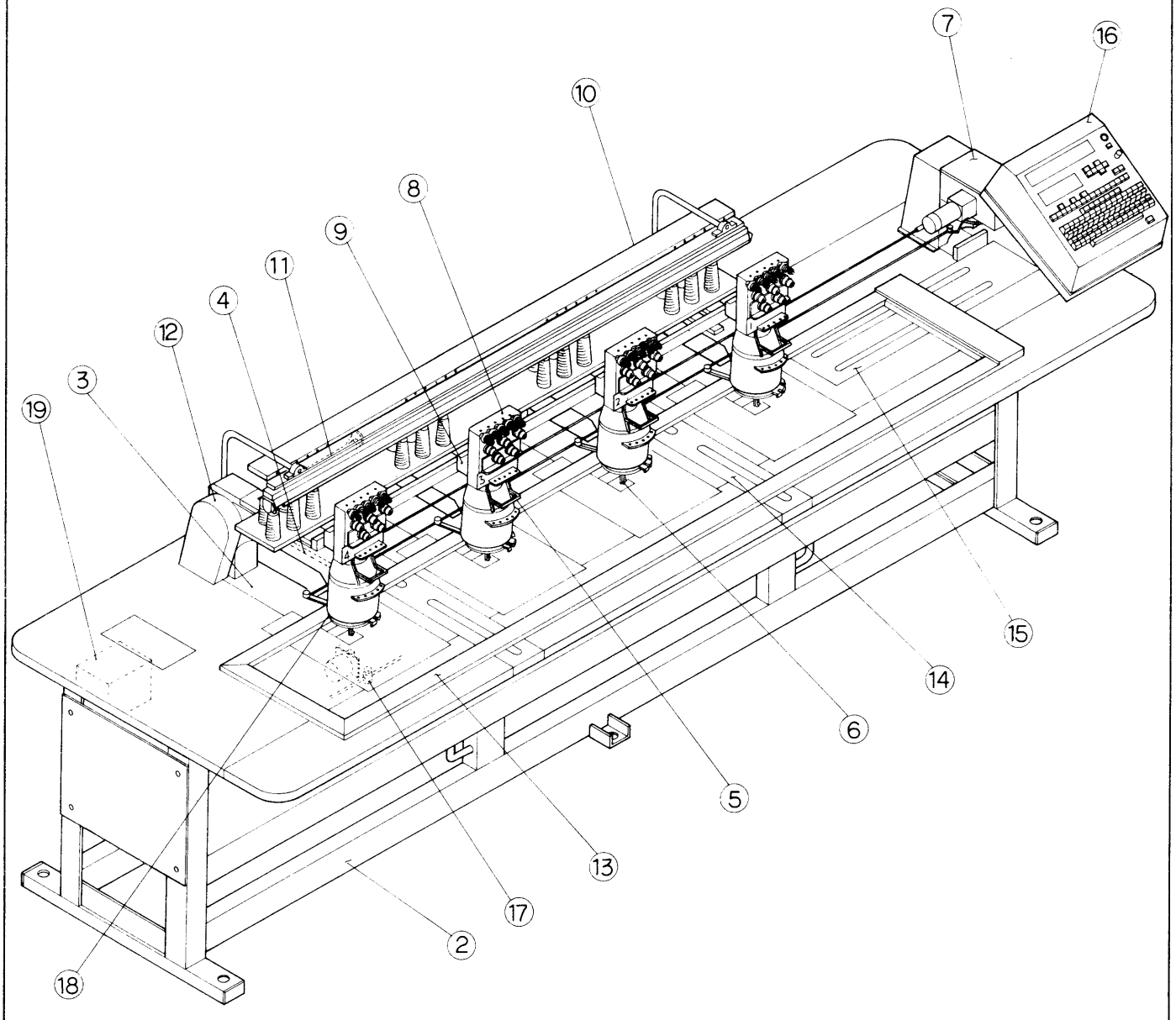

① Machine layout (BEAT−M704)

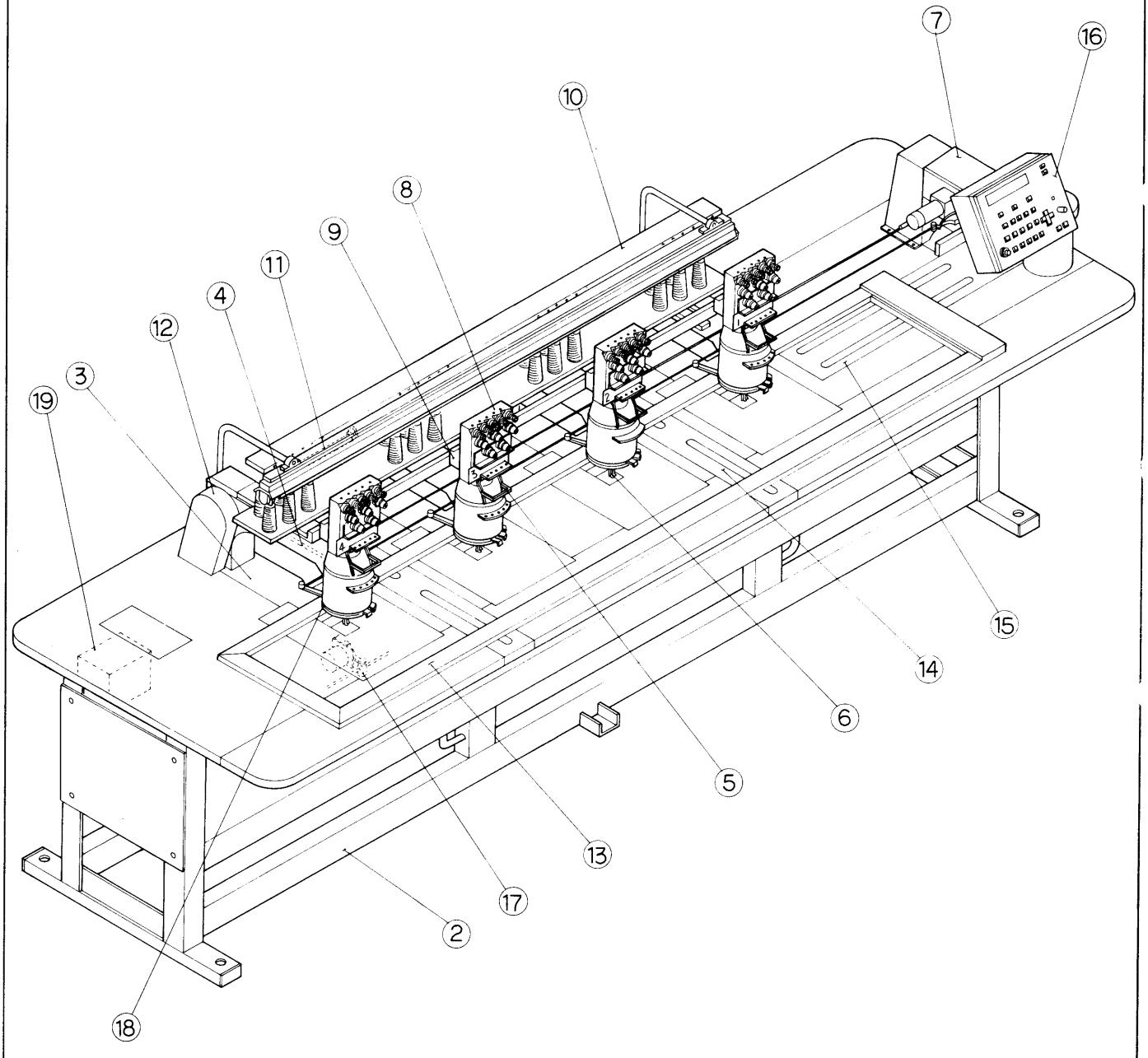

① Machine layout (BEAT－706)

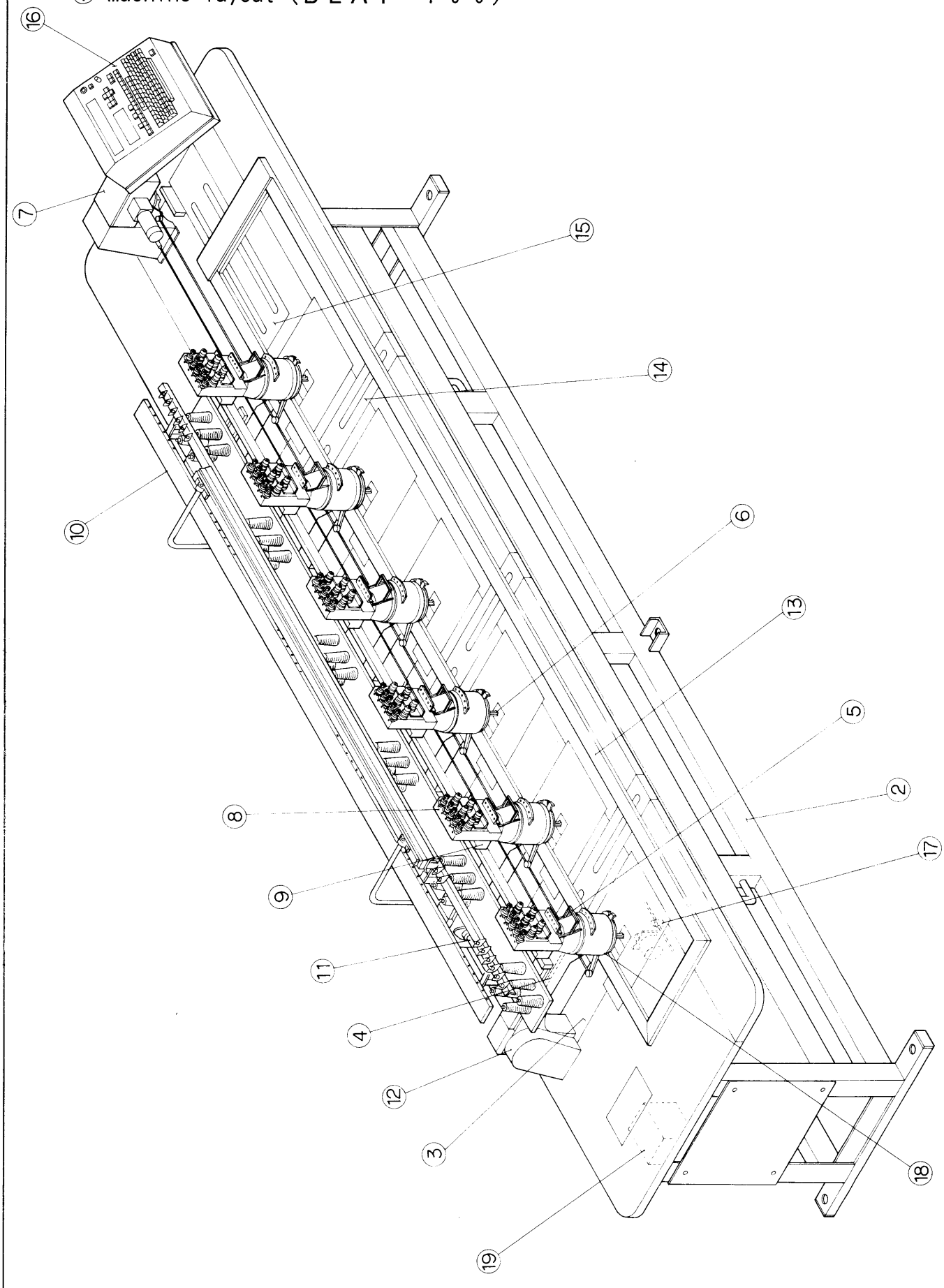

① Machine layout (BEAT－M706)

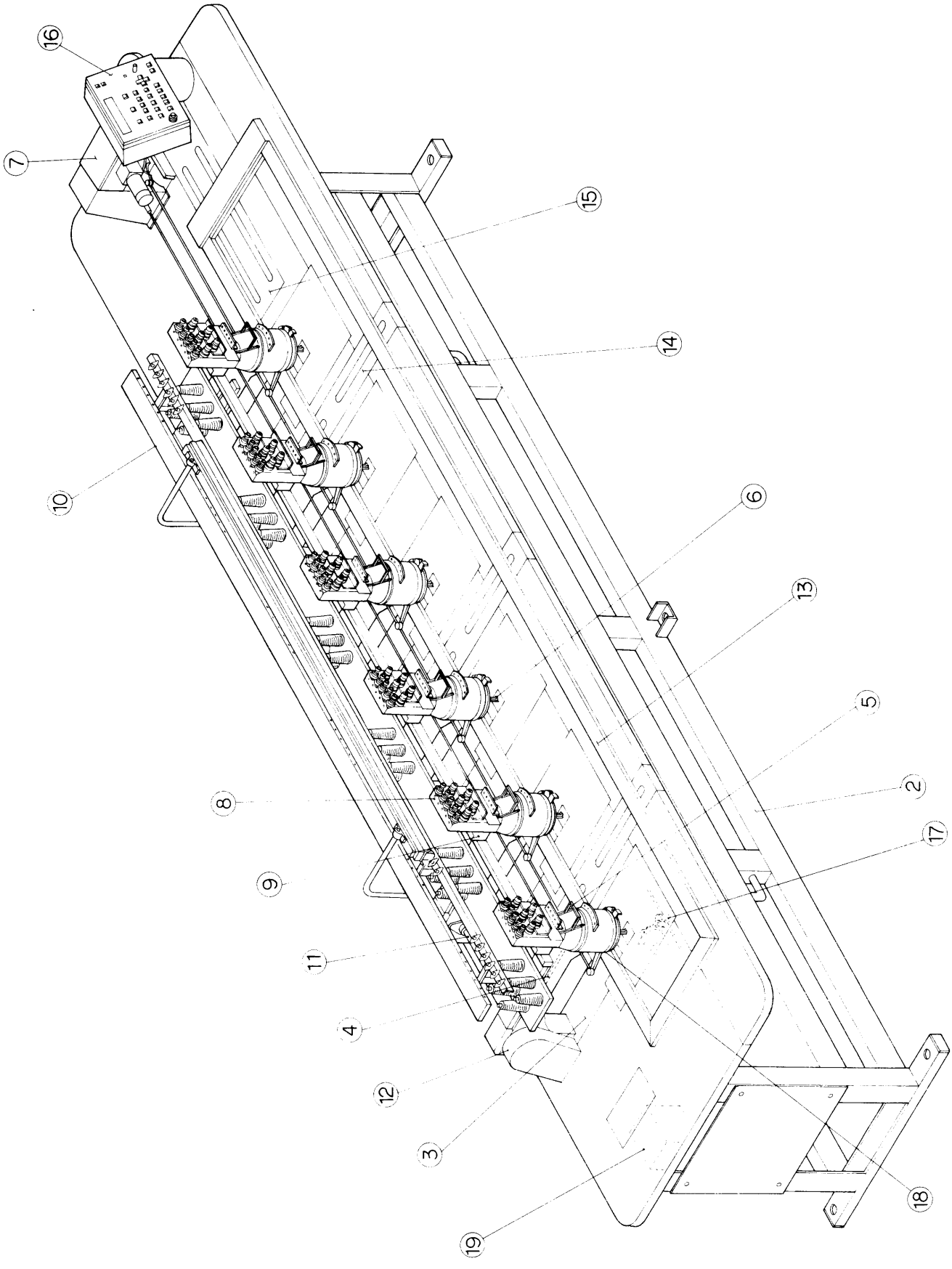

① Machine layout (BEAT－708)

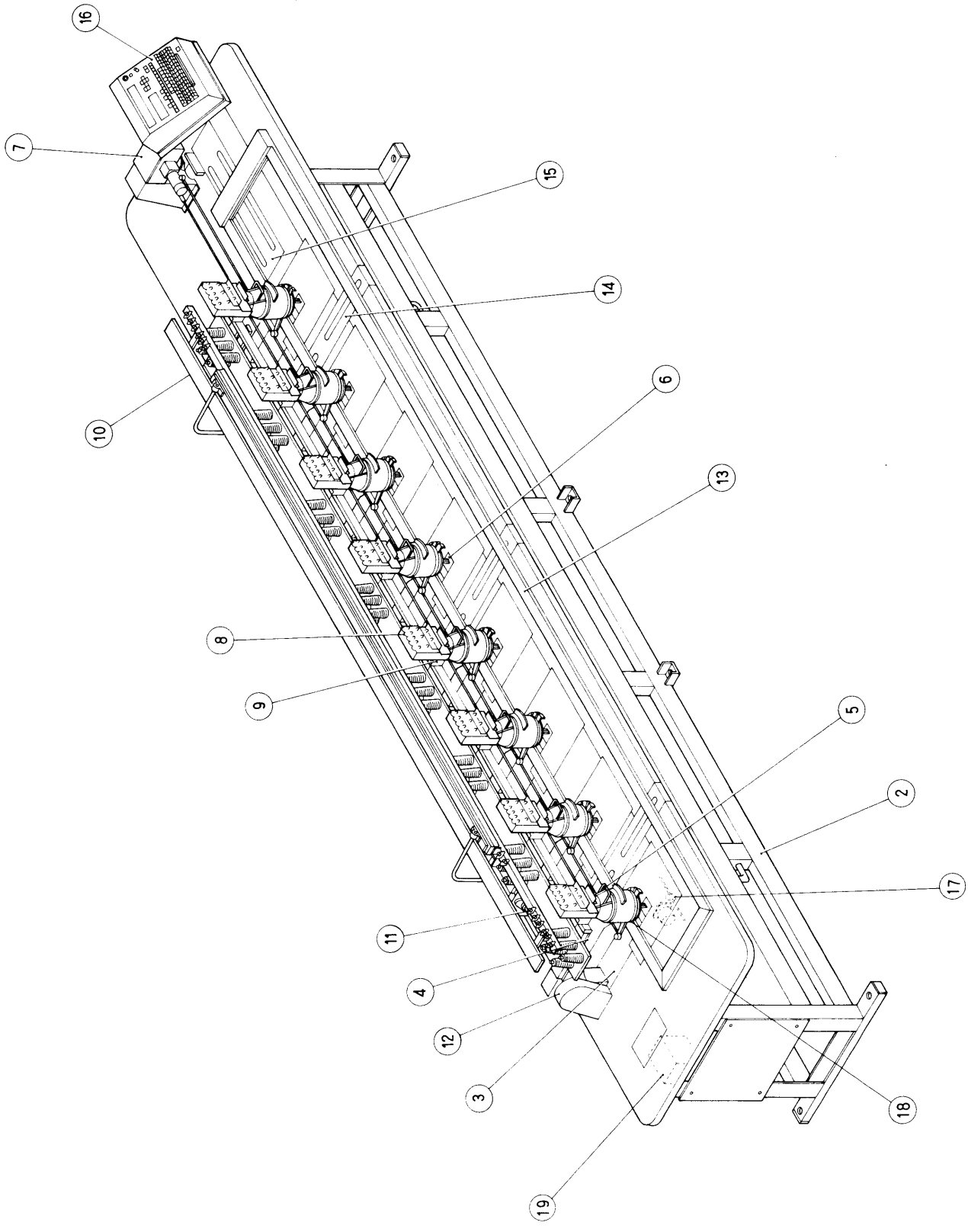

① Machine layout (BEAT－M708)

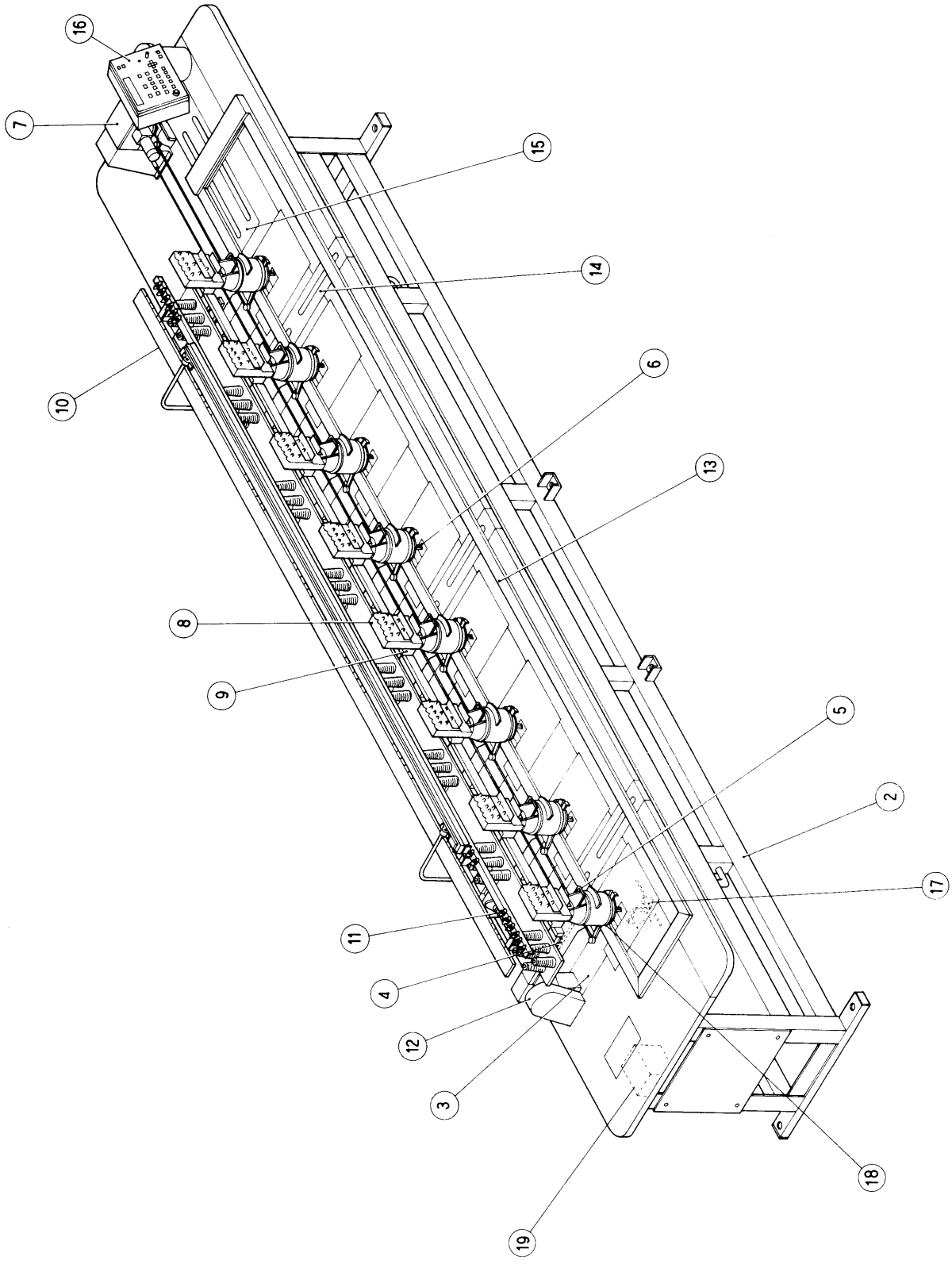

② Table-Frame （ＢＥＡＴ－７０４） 320×520

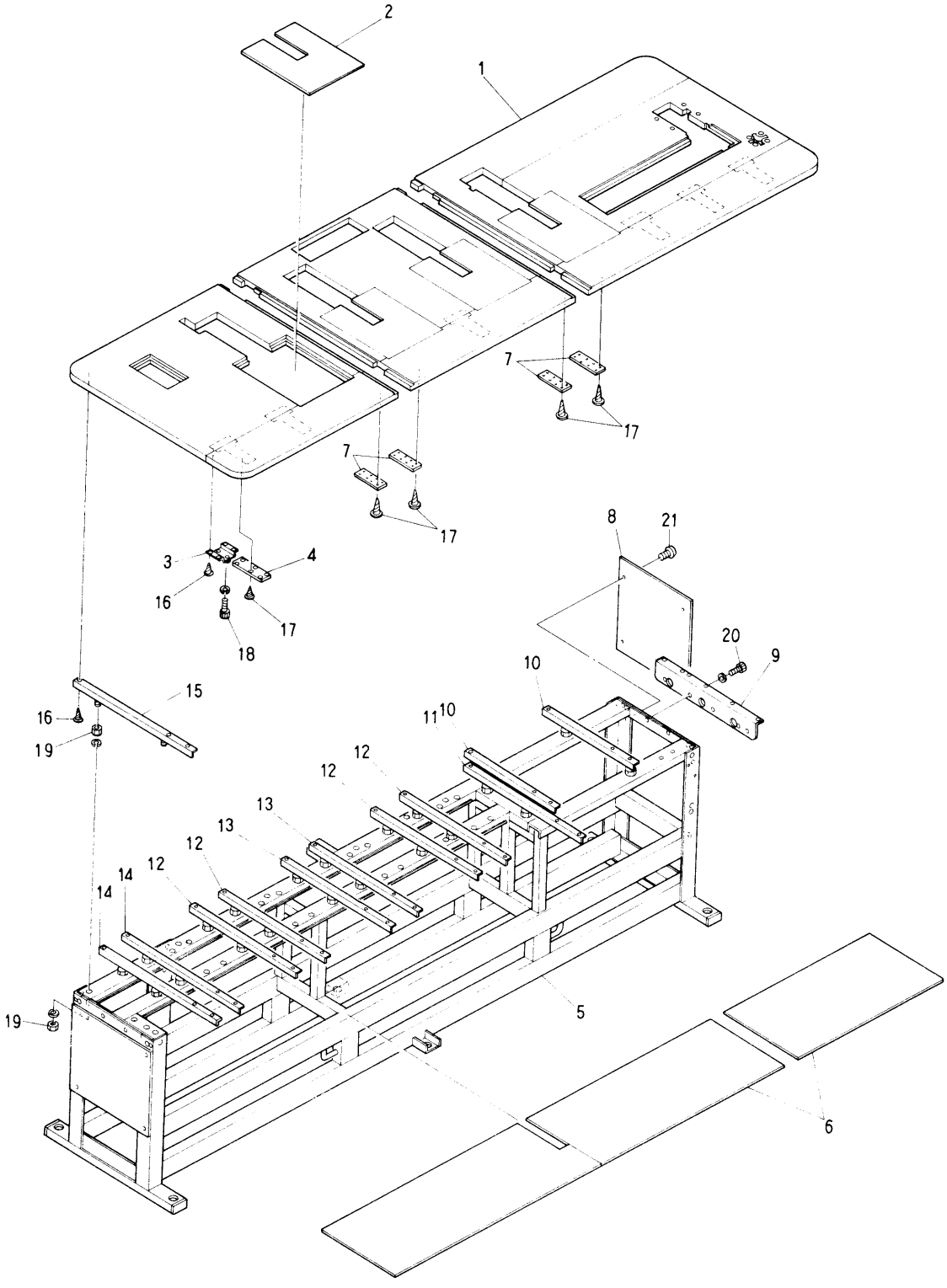

② Fram・Table (BEAT-704)

320×520

ITEM	PART No.	LIST No.	DESCRIPTION	Q'TY	REMARK
1	15G0U01	KU151601	Table (BEAT-704, 320×520)	1	
2	1266G02	KG120662	Table cover	4	
3	1438A	MA140380	Table support bracket	6	
4	1469A	MA140690	Table support (L)	6	
5	16G0U01	KU161601	Frame support (BEAT-704,320 ×520)	1	
6	15H0U00	KU151700	Shelf board set (BEAT-704,320 ×520)	1	
7	1470U0U	KU140700	Table support (S)(BEAT)	4	
8	1191C	KC110910	Frame support side cover (R)	1	
9	1280U00	KU120800	Table support	1	
10	1284C01	KC120841	Table support (475L)	2	
11	1455U00	KU140550	Table support	1	
12	1457A	MA140570	Table support (650L・AT-106)	4	
13	1454A	MA140540	Table support (NO.2)	2	
14	1453A	MA140530	Table support (NO.1)	2	
15	1458A	MA140580	Table support	1	
16			Wood screw M5.1×25		
17			Wood screw M5.1×32		
18			Hex. socket bolt M8×15		
19			Hex. nut 3/8		
20			Hex. socket bolt M6×20		
21			Hex. socket bolt M6×8		

(IA)7.50

② Table-Frame （ＢＥＡＴ－７０４）320×450

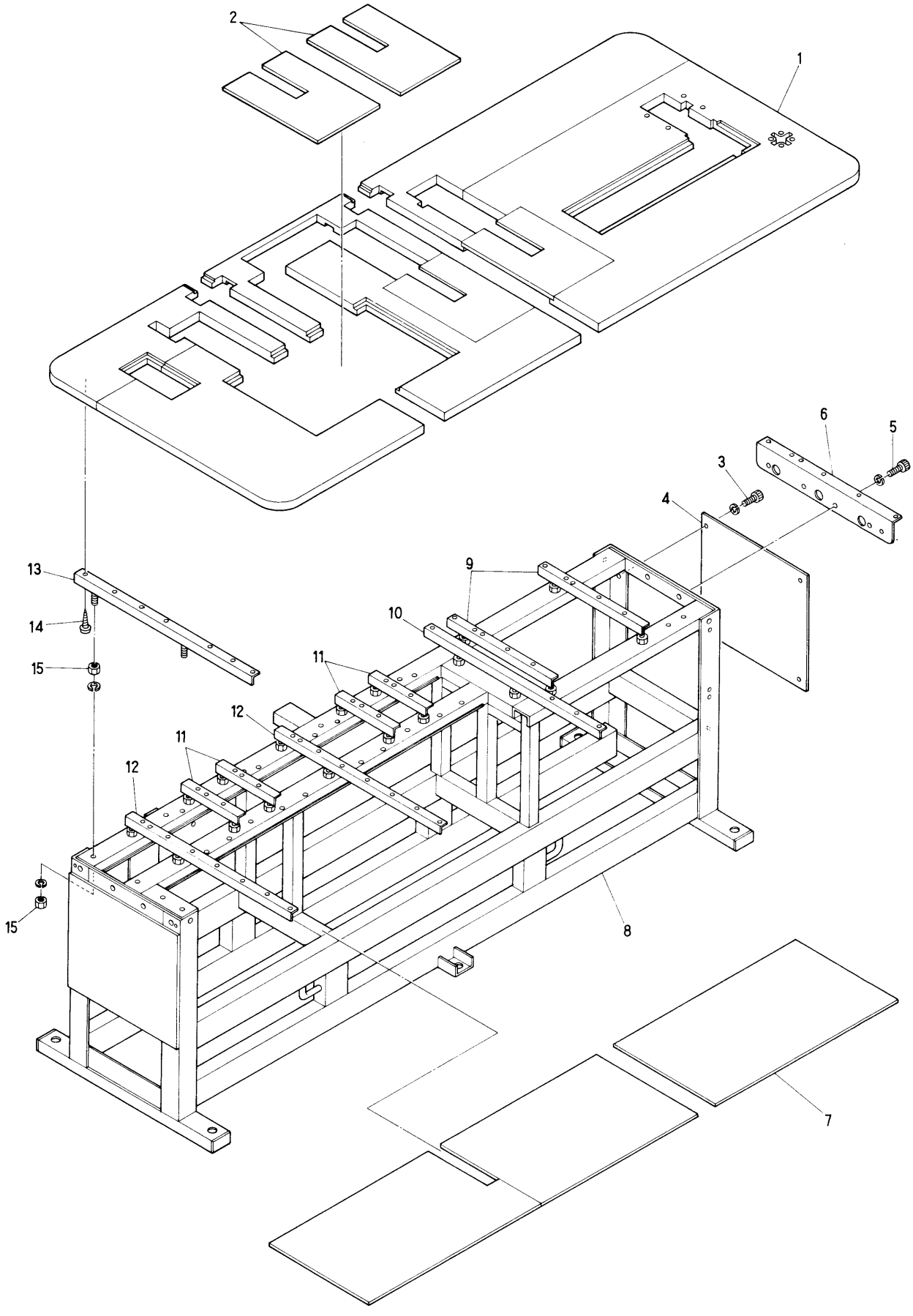

② Fram・Table (BEAT-704)

320×450

ITEM	PART No.	LIST No.	DESCRIPTION	Q'TY	REMARK
1	15G7U01	KU151671	Table (BEAT-704, 320×450)	1	
2	1549A01	MA150491	Table cover No.16	4	
3			Hex. socket bolt M6×8		
4	1191C	KC110910	Frame support side cover (R)	1	
5			Hex. socket bolt M6×20		
6	1280U00	KU120800	Table support	1	
7	15H8U01	KU151781	Shelf board set (BEAT-704, 320×450)	1	
8	16G7U01	KU161671	Frame (BEAT-704, 320×450)	1	
9	1284C01	KC120841	Table support No.1 475L	2	
10	1454C	KC140540	Table support No.2 790L	1	
11	1456C	KC140560	Table support No.3 264L	4	
12	1455C	KC140550	Table support No.4 740L	1	
13	1453C	KC140530	Table support No.5 790L	1	
14	1286C	KC120860	Table support No.6 790L	1	
15			Wood screw M5.1×25		
16			Hex. nut 3/8		

(IA)7.50

② Table-Frame （ＢＥＡＴ－７０４） 320×350

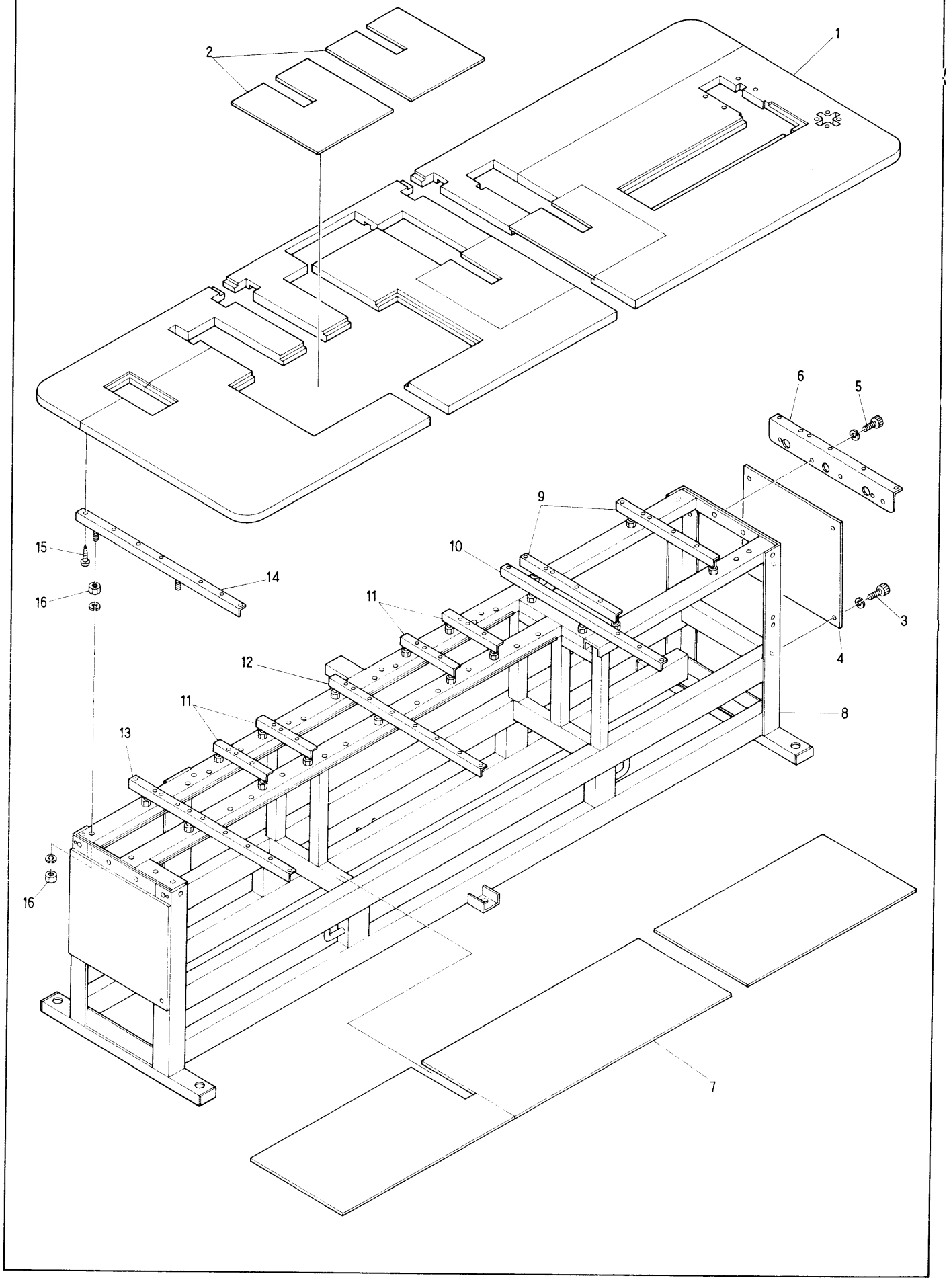

② Fram・Table (BEAT-704)

320×350

ITEM	PART No.	LIST No.	DESCRIPTION	Q'TY	REMARK
1	15G9U00	KU151690	Table (BEAT-704, 320×350)	1	
2	12D2U00	KU121320	Table cover	4	
3			Hex socket bolt M6×8		
4	1191C	KC110910	Frame support side cover (R)	1	
5			Hex. socket bolt M6×20		
6	1280U00	KU120800	Table support	1	
7	15J1U00	KU151910	Shelf board set (BEAT-704, 320×350)	1	
8	16G9U00	KU161690	Frame (BEAT-704, 320×350)	1	
9	1284C01	KC120841	Table support No.1 475L	2	
10	1454C	KC140540	Table support No.2 790L	1	
11	1456C	KC140560	Table support No.3 264L	4	
12	1455C	KC140550	Table support No.4 740L	2	
13	1286C	KC120860	Table support No.5 790L	1	
14			Wood screw M5.1×25		
15			Hex. nut 3/8		

(IA)7.50

② Table-Frame （ＢＥＡＴ－７０６） 320×520

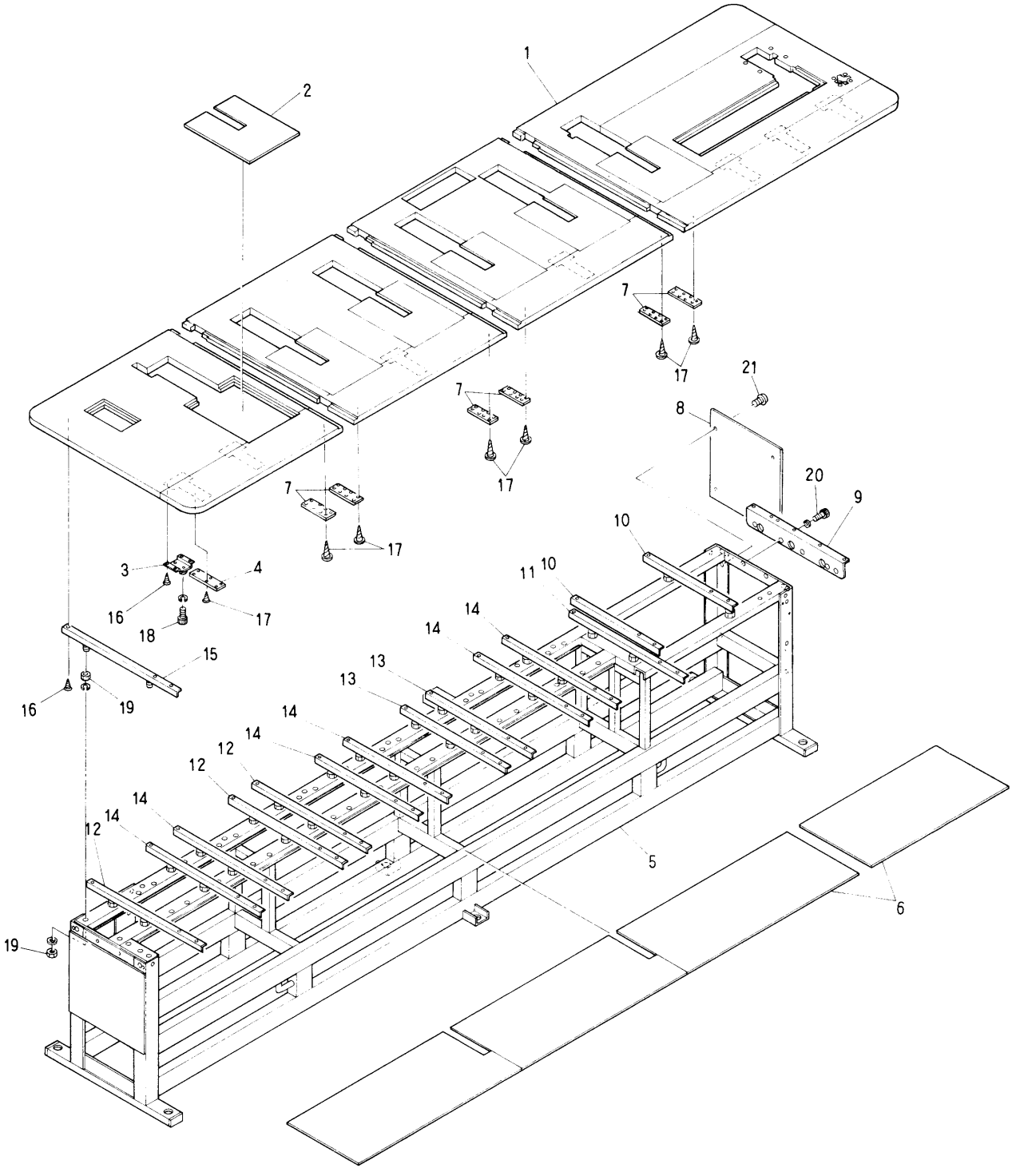

② Fram・Table (BEAT-706)

320×520

ITEM	PART No.	LIST No.	DESCRIPTION	Q'TY	REMARK
1	15G1U01	KU151611	Table (BEAT-706, 320×520)	1	
2	1266G02	KG120662	Table cover	6	
3	1438A	MA140380	Table support bracket	7	
4	1469A	MA140690	Table support (L)	7	
5	16G1U01	KU161611	Frame support (BEAT-706,320 ×520)	1	
6	15H1U00	KU151710	Shelf board set (BEAT-706,320 ×520)	1	
7	1470U00	KU140700	Table support (S)(BEAT)	6	
8	1191C	KC110910	Frame support side cover (R)	1	
9	1280U00	KU120800	Table support	1	
10	1284C01	KC120841	Table support (475L)	2	
11	1455U00	KU140550	Table support	1	
12	1453A	MA140530	Table support NO.1	3	
13	1454A	MA140540	Table support NO.2	2	
14	1457A	MA140570	Table support (650L・AT-106)	6	
15	1458A	MA140580	Table support	1	
16			Wood screw M5.1×25		
17			Wood screw M5.1×32		
18			Hex. socket bolt M8×15		
19			Hex. Nut 3/8		
20			Hex. socket bolt M6×20		
21			Hex. socket bolt M6×8		

(IA)7.50

② Table-Frame （ＢＥＡＴ－７０６） 320×450

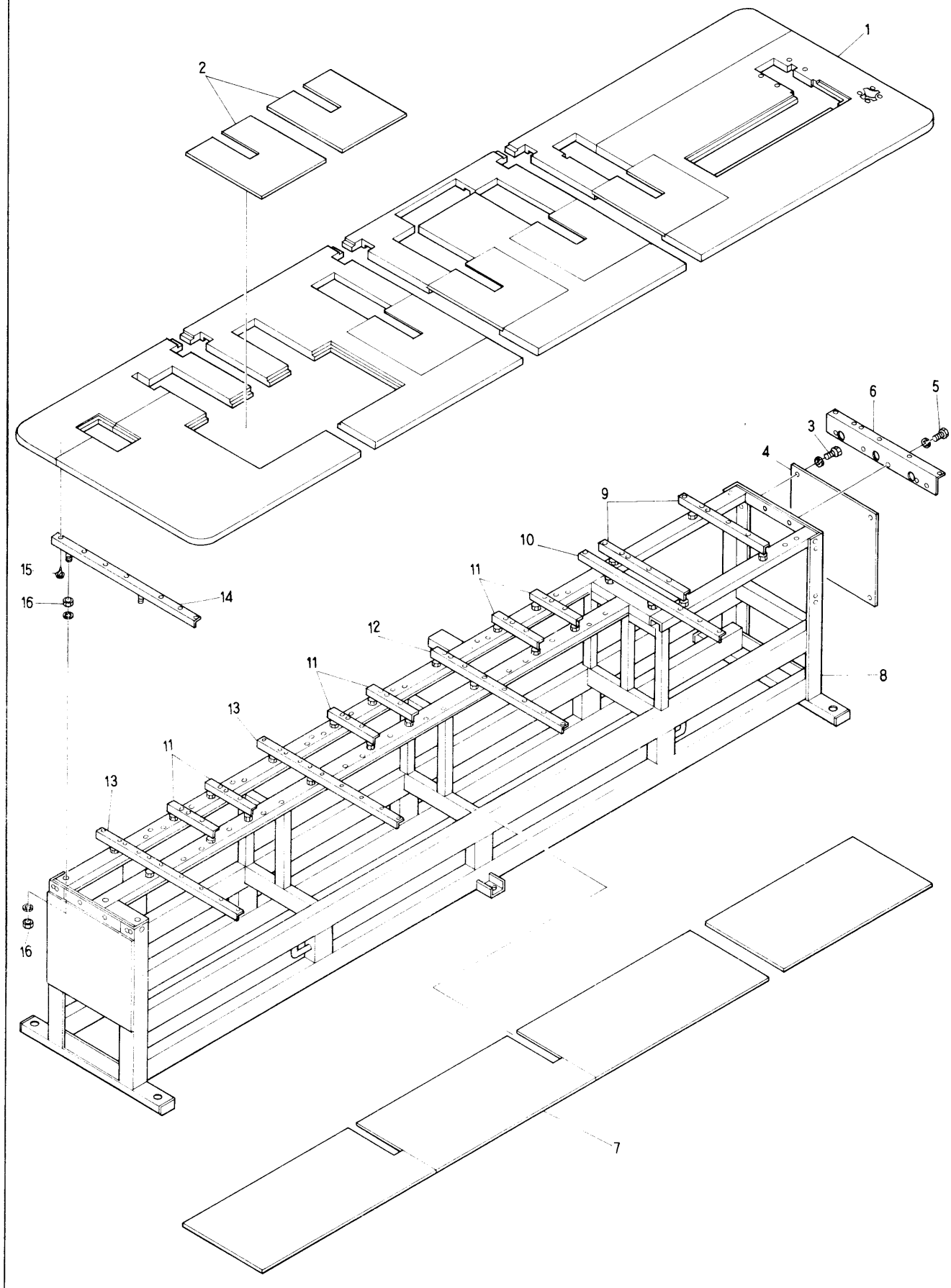

② Fram・Table (BEAT-706)

320×450

ITEM	PART No.	LIST No.	DESCRIPTION	Q'TY	REMARK
1	15G8U00	KU151680	Table (BEAT-706, 320×450)	1	
2	1549A01	MA150491	Table cover No.16	6	
3			Hex. socket bolt M6×8		
4	1191C	KC110910	Frame support side cover (R)	1	
5			Hex. socket bolt M6×20		
6	1280U00	KU120800	Table support	1	
7	15H9U00	KU151790	Shelf board set (BEAT-704, 320×450)	1	
8	16G8U00	KU161680	Frame (BEAT-704, 320×450)	1	
9	1284C01	KC120841	Table support No.1 475L	2	
10	1454C	KC140540	Table support No.2 790L	1	
11	1456C	KC140560	Table support No.3 264L	6	
12	1455C	KC140550	Table support No.4 740L	1	
13	1453C	KC140530	Table support No.5 790L	2	
14	1286C	KC120860	Table support No.6 790L	1	
15			Wood screw M5.1×25		
16			Hex. nut 3/8		

(IA)7.50

② Table-Frame （ＢＥＡＴ－７０６） 320×350

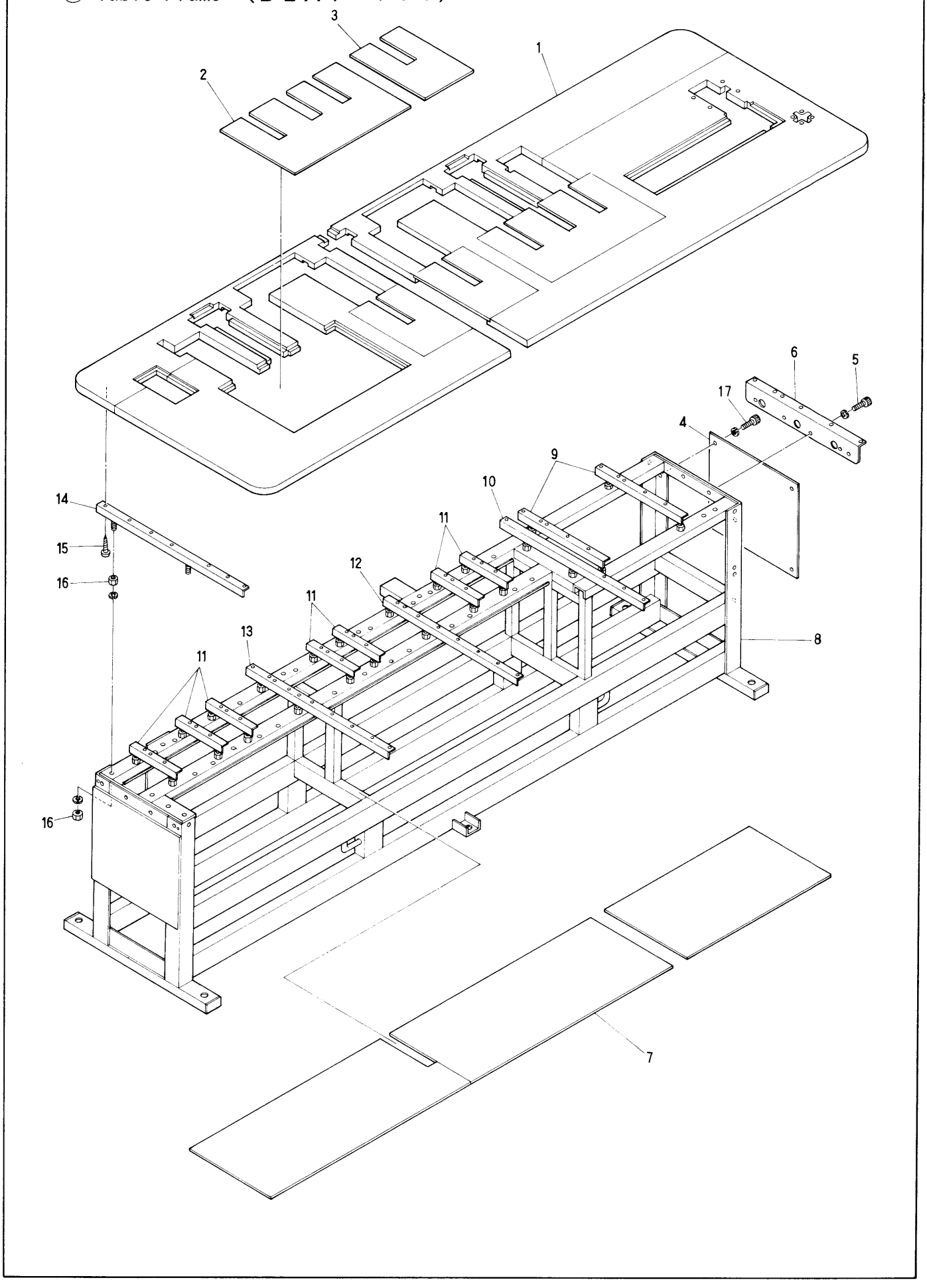

② Fram・Table (BEAT-706)

320×350

ITEM	PART No.	LIST No.	DESCRIPTION	Q'TY	REMARK
1	15G3U01	KU151631	Table (BEAT-706,320×350)	1	
2	12D1U00	KU121310	Table cover	2	
3	12D2U00	KU121320	Table cover	2	
4	1191C	KC110910	Frame support side cover (R)	1	
5			Hec, socket bolt M6×20		
6	1280U00	KU120800	Table support	1	
7	15H3U01	KU151731	Shelf board set (BEAT-704,320×350)	1	
8	16G3U01	KU161631	Frame (BEAT-706,320×350)	1	
9	1284C01	KC120841	Table support No.1 475L	2	
10	1454C	KC140540	Table support No.2 790L	1	
11	1456C	KC140560	Table support No.3 264L	7	
12	1455C	KC140550	Table support No.4 740L	1	
13	1453C	KC140530	Table support No.5 790L	1	
14	1286C	KC120860	Table support No.6 790L	1	
15			Wood screw M5.1×25		
16			Hex, nut 3/8		
17			Hex, socket bolt M6×8		

(IA)7.50

② Table-Frame （ＢＥＡＴ－７０８） 320×520

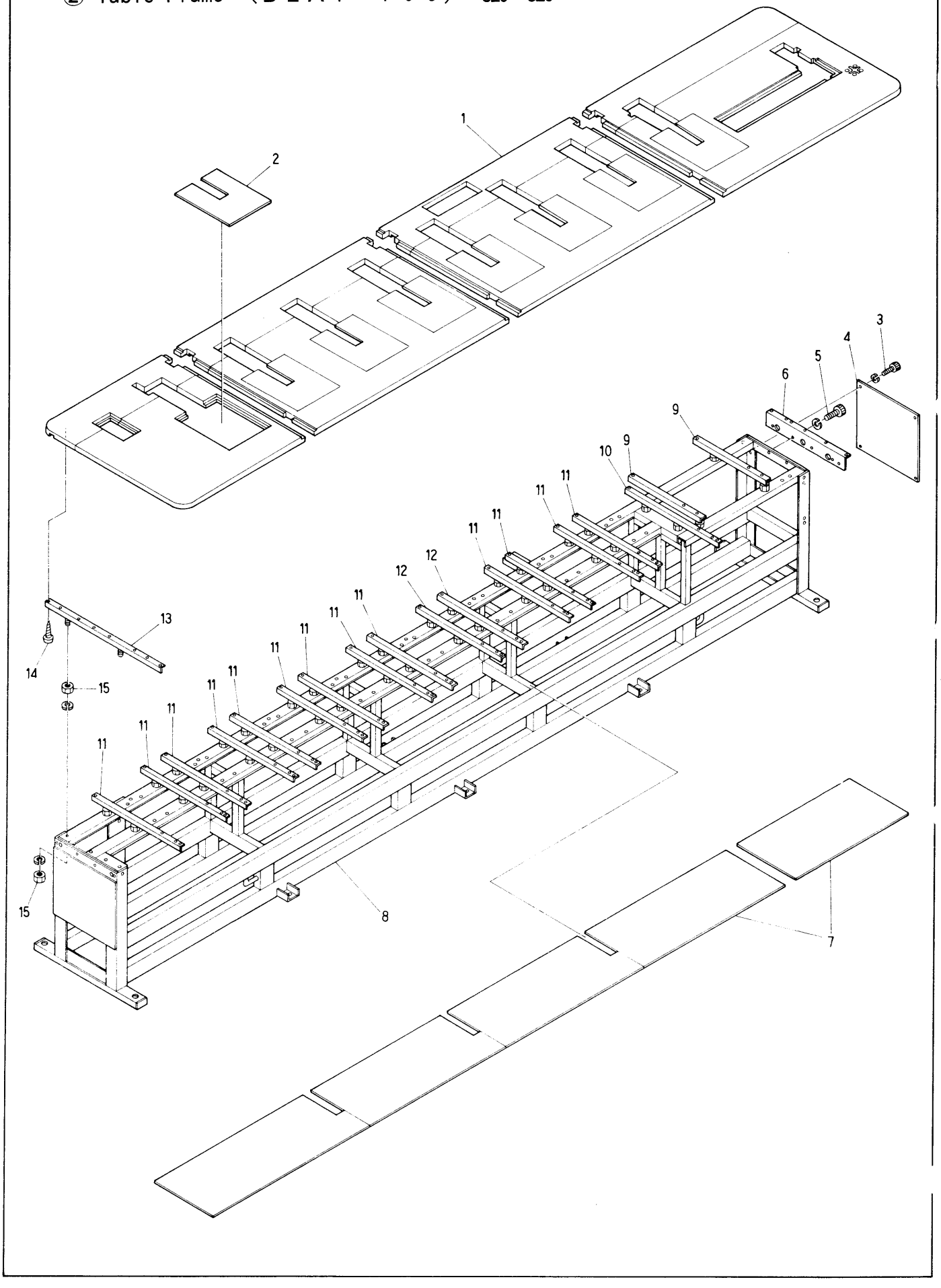

② Fram・Table (BEAT-708)

320×520

ITEM	PART No.	LIST No.	DESCRIPTION	Q'TY	REMARK
1	15G4U02	KU151642	Table (BEAT-708, 320×520)	1	
2	1266G02	KG120662	Table cover	8	
3			Hex, socket bolt M6×8		
4	1191C	KC110910	Frame support side cover (R)	1	
5			Hex, socket bolt M6×20		
6	1280U00	KU120800	Table support	1	
7	15H4U01	KU151741	Shelt (BEAT-708, 320×520)	1	
8	16G4U01	KU161641	Frame (BEAT-708, 320×520)	1	
9	1284C01	KC120841	Table support (475L)	2	
10	1454C	KC140540	Table support No.2 P250 (JMC)	1	
11	1453C	KC140530	Table support No.1 P214 (JMC)	13	
12	1455C	KC140550	Table support No.3	2	
13	1286C	KC120860	HJ Table support 790L	1	
14			Wood screw M5.1×25	1	
15			Hex, nut 3/8		

(IA)7.50

② Table-Frame （ＢＥＡＴ－７０８） 320×450

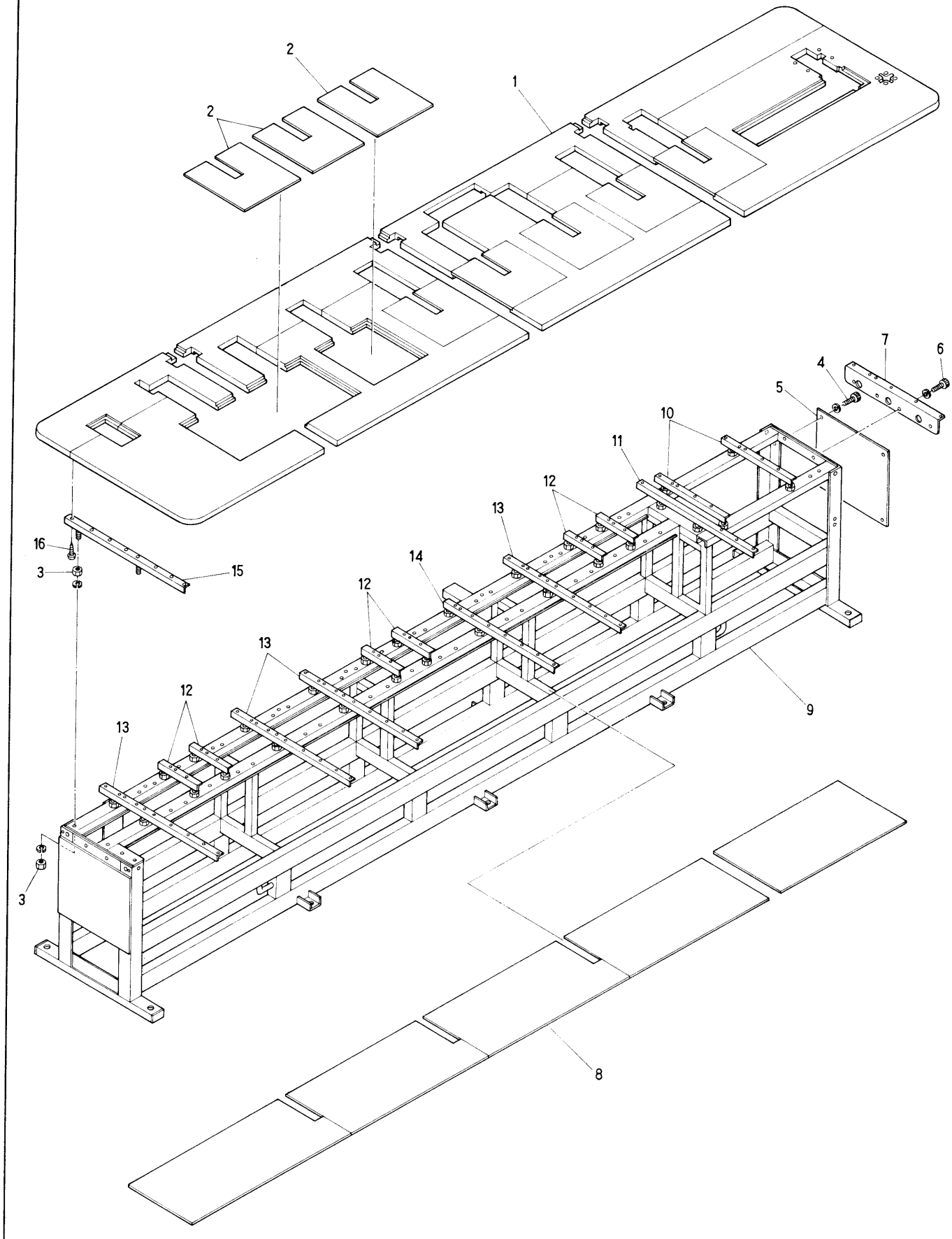

② Fram・Table (BEAT-708)

320×450

ITEM	PART No.	LIST No.	DESCRIPTION	Q'TY	REMARK
1	15G5U01	KU151651	Table (BEAT-708, 320×450)	1	
2	1549A01	MA150491	Table cover No.16	8	
3			Hex, nut 3／8		
4			Hex, socket bolt M6×8		
5	1191C	KC110910	Frame support side cover (R)	1	
6			Hex, socket bolt M6×20		
7	1280U00	KU120800	Table support	1	
8	15H5U01	KU151751	Shelf board set (BEAT-708, 320×450)	1	
9	16G5U01	KU161651	Frame (BEAT-708, 320×450)	1	
10	1284C01	KC120841	Table support No.1 475L	2	
11	1454C	KC140540	Table support No.2 790L	1	
12	1456C	KC140560	Table support No.3 264L	6	
13	1453C	KC140530	Table support No.4 790L	3	
14	1455C	KC140550	Table support No.5 740L	1	
15	1286C	KC120860	Table support No.6 790L	1	
16			Wood screw M5.1×25		

(IA)7.50

② Table-Frame （ＢＥＡＴ－７０８） 320×350

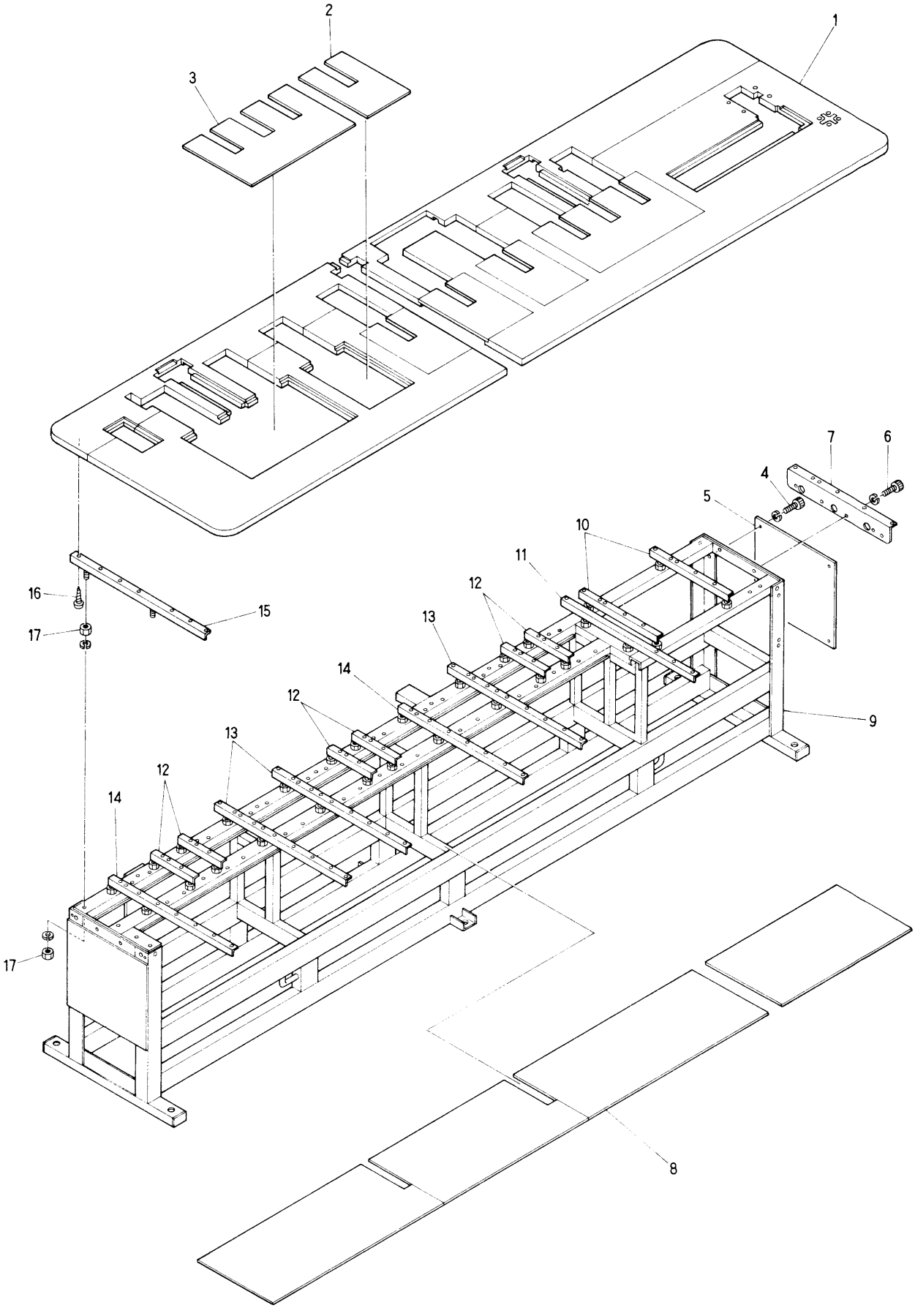

② Fram・Table (BEAT-708)

320×350

ITEM	PART No.	LIST No.	DESCRIPTION	Q'TY	REMARK
1	15G6U01	KU151661	Table (BEAT-708, 320×350)	1	
2	12D2U00	KU121320	Table cover	4	
3	12D1U00	KU121310	Table cover	2	
4			Hex. socket bolt M6×8		
5	1191C	KC110910	Frame support side cover (R)	1	
6			Hex. socket bolt M6×20		
7	1280U00	KU120800	Table support	1	
8	15H6U01	KU151761	Shelf board set (BEAT-704, 320×350)	1	
9	16G6U01	KU161661	Frame (BEAT-708, 320×350)	1	
10	1284C01	KC120841	Table support No.1 475L	2	
11	1454C	KC140540	Table support No.2 790L	1	
12	1456C	KC140560	Table support No.3 264L	6	
13	1453C	KC140530	Table support No.4 790L	3	
14	1455C	KC140550	Table support No.5 740L	2	
15	1286C	KC120860	Table support No.6 790L	1	
16			Wood screw M5.1×25		
17			Hex. nut 3/8		

(IA)7.50

③ Bed Assy

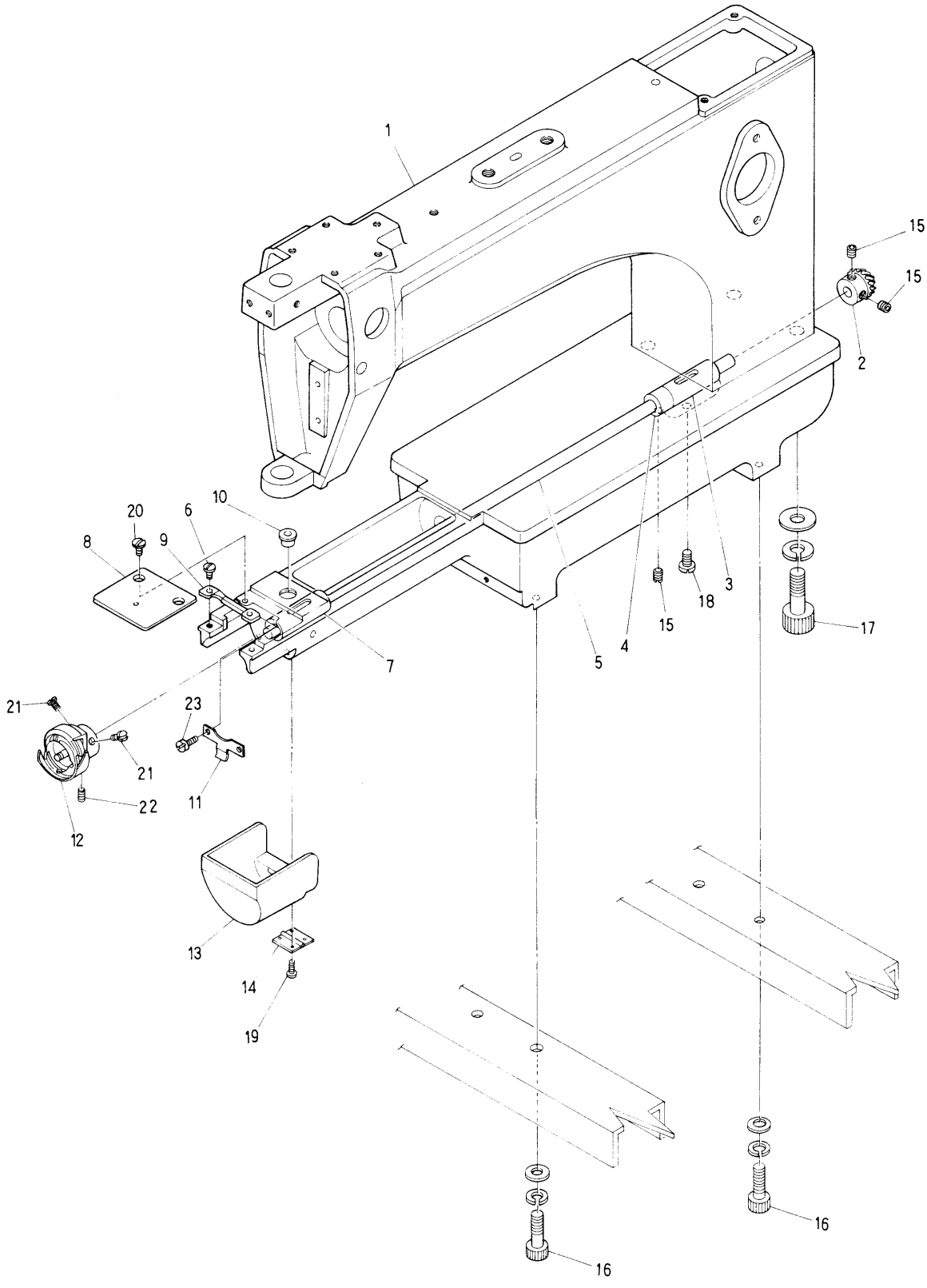

③ Bed Assy

ITEM	PART No.	LIST No.	DESCRIPTION	Q'TY	REMARK
1	2180U00	KU210800	JMC assy head (A) UF		
	2182U00	KU210820	JMC assy head (B) UF		
	2181U00	KU210810	JMC assy head (A) US		
	2183U00	KU210830	JMC assy head (B) US		
2	2248F	KF220480	Bevel gear (Under shaft)	1/H	
3	2222F	KF220220	Under shaft metal (Rear)	1/H	
4	2229F	KF220290	Under shaft collar	1/H	
5	2221C	KC220210	Under shaft JM	1/H	
6	91207	A9012007	Screw	2/H	
7	2223F	KF220230	Under shaft metal (Front)	1/H	
8	2513A01	MA250131	Needle plate	1/H	
9	2251A	MA220510	Bobbin case Fixing plate	1/H	
10	2255F	KF220550		1/H	
11	2548C01	KC250481		1/H	
12	2231F	KF220310	Bobbin case HSL-A-MIQ	1/H	
13	2547C01	KC250471	Bed cover	1/H	
14	91227	A9012027	Hinge (TH-TM-72)(JMC-AT)	1/H	
15			Hex. socket set screw (SM1/4 40×5)		
16			Hex. socket bolt M8×20		
17			Hex. socket bolt M8×20		
18			Screw (SM15/64 28×10)		
19			Pan screw M3×5		
20			Screw (SM11/64 40×6)		
21			Screw (SM11/64 40×4.5)		
22			Set screw (SM11/64 40×4.5)		
23			Pan screw M3×5		

④ Top shaft. Verticl shaft

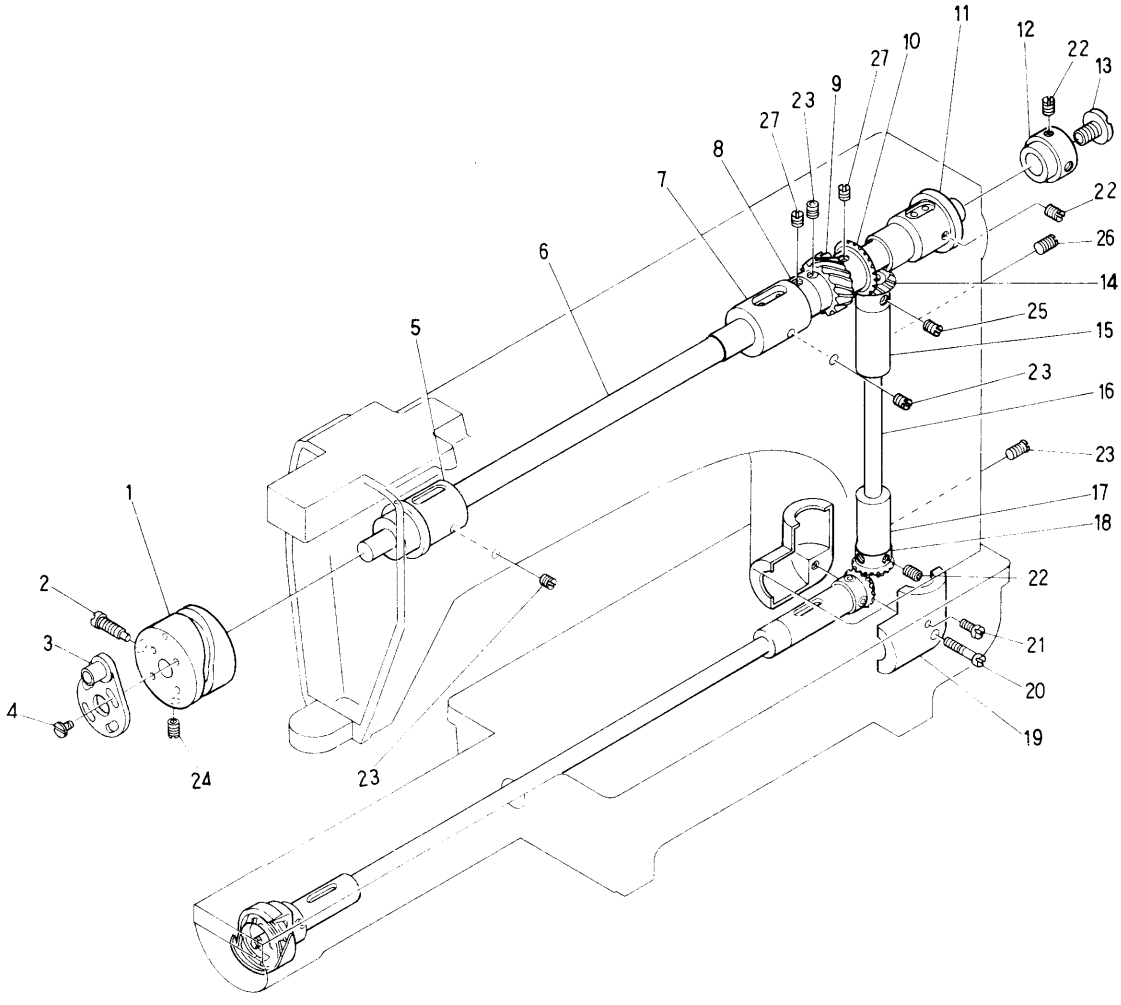

④ Top shaft. Verticl shaft

ITEM	PART No.	LIST No.	DESCRIPTION	Q'TY	REMARK
1	2341N00	KN230410	Take up lever cam G	1/H	
2	2342F	KF230420	Cam set screw	1/H	
3	2343N00	KN230430	90° Clank	1/H	
4	91207	A9012007	Bobbin fixing set screw	4/H	
5	2214F	KF220140	Top shaft metal (Front)	1/H	
6	2211F	KF220110	Top shaft UF	1/H	
7	2216F	KF220160	Top shaft metal (Middle)	1/H	
8	2218F	KF220180	Top shaft collar	1/H	
9	2212F	KF220120	Top shaft (S)	1/H	
10	2213F	KF220130	Bevel gear	1/H	
11	2215F	KF220150	Top shaft metal (Rear)	1/H	
12	2219F	KF220190	Top shaft collar (Rear)	1/H	
13	2245F	KF220450	Top shaft adjust screw	1/H	
14	2246F	KF220460	Bevel gear (Vertical shaft upper)	1/H	
15	2224F	KF220240	Vertical shaft metal (Upper)	1/H	
16	2225F	KF220250	Vertical shaft	1/H	
17	2223F	KF220230	Bottom shaft metal (Front)	1/H	
18	2247F	KF220470	Bevel gear (Vertical shaft lower)	1/H	
19	2227F	KF220270	Gear cover set	1/H	
20			Screw (SM15/64 28×38)		
21			Screw (SM15/64 28×24)		
22			Set screw (SM15/64 28×6)		
23			Hex. socket set screw M6 L=6		
24			Set screw (SM15/64 28×8)		
25			Set screw M6 L=6		
26			Hex. socket set screw M6 L=6		
27			Set screw (SM1/4 40×6)		

⑤ Needle bar-Take up lever mechanism I (5)

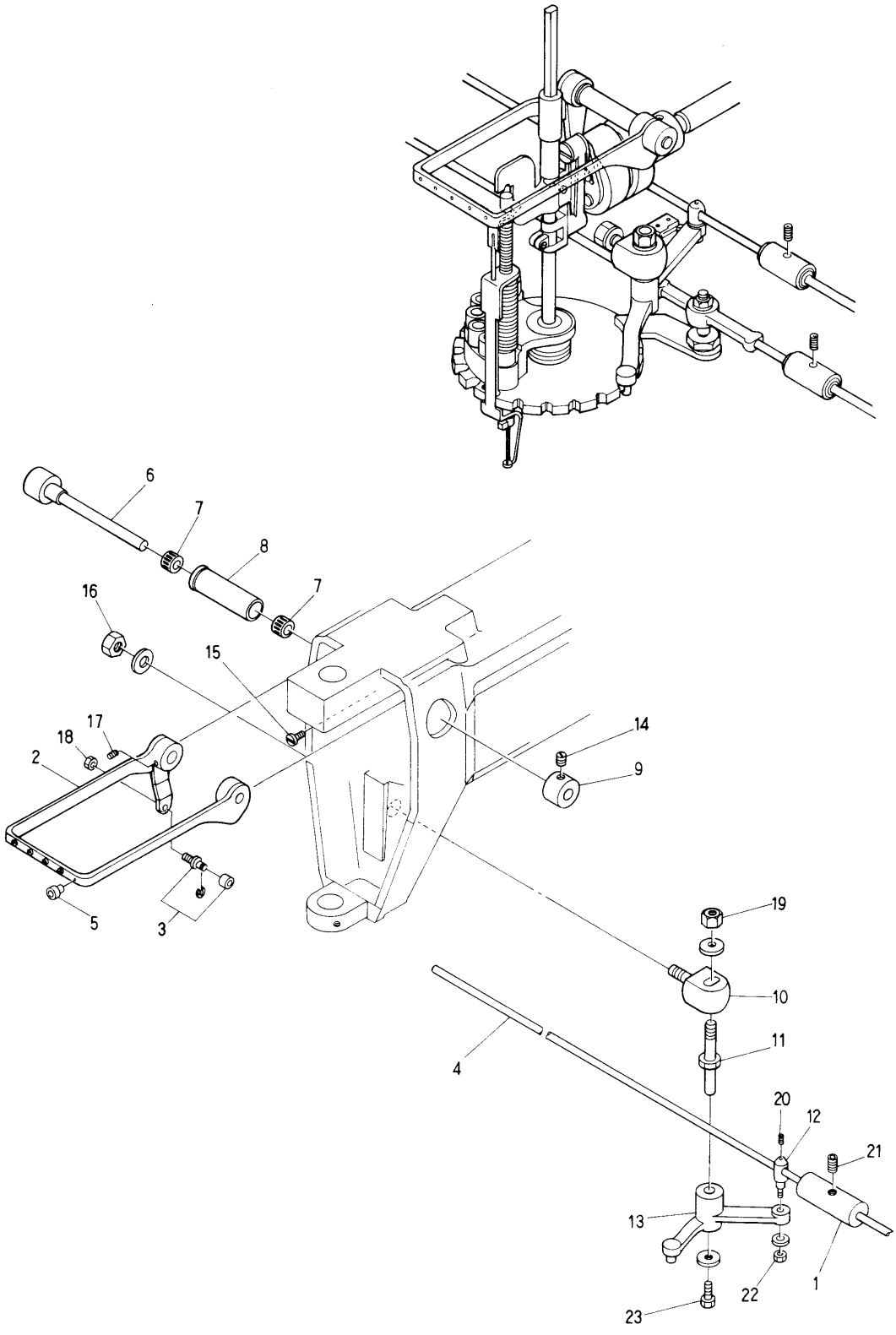

⑤ Needle bar・Take up lever mechanism Ⅰ (5)

ITEM	PART No.	LIST No.	DESCRIPTION	Q'TY	REMARK
1	3381F01	KF330381	Lock bar hand grip	1	
2	2349T00	MT230490	Take up lever (5needles)	1/H	
3	2368F00	KF230530	Take up lever roller assy	1/H	
4	3341C	KF230540	Lock connecting rod	2	
5	2358F	KF230580	Ceramic thread guide	5/H	
6	2351F	KF230510	Take up lever shaft	1/H	
7	911B2	A9011112	Needle geage 1KG×11×8T2	2/H	
8	2352T00	MT230520	Take up lever bearing case	1/H	
9	2355F	KF230550	Take up lever shaft collar	1/H	
10	2365F	KF230650	Lock lever bracket	1/H	
11	2363F	KF230630	Lock lever shaft	1/H	
12	2364F	KF230640	Lock connection rod clamp	1/H	
13	2361G	KF230610	US Lock lever	1/H	
14			Set screw (SM1/4 40×6)		
15			Screw (SM11/64 40×10)		
16			Hex. nut M10		
17			Hex. socket set screw M5×6		
18			Hex. nut (SM7/32 28)		
19			Hex. nut M8		
20			Hex. socket set screw M4×5		
21			Hex. socket set screw M5×5		
22			Hex. nut M4		
23			Hex. bolt M5×15		

⑤ Needle bar-Take up lever mechanism I (7)

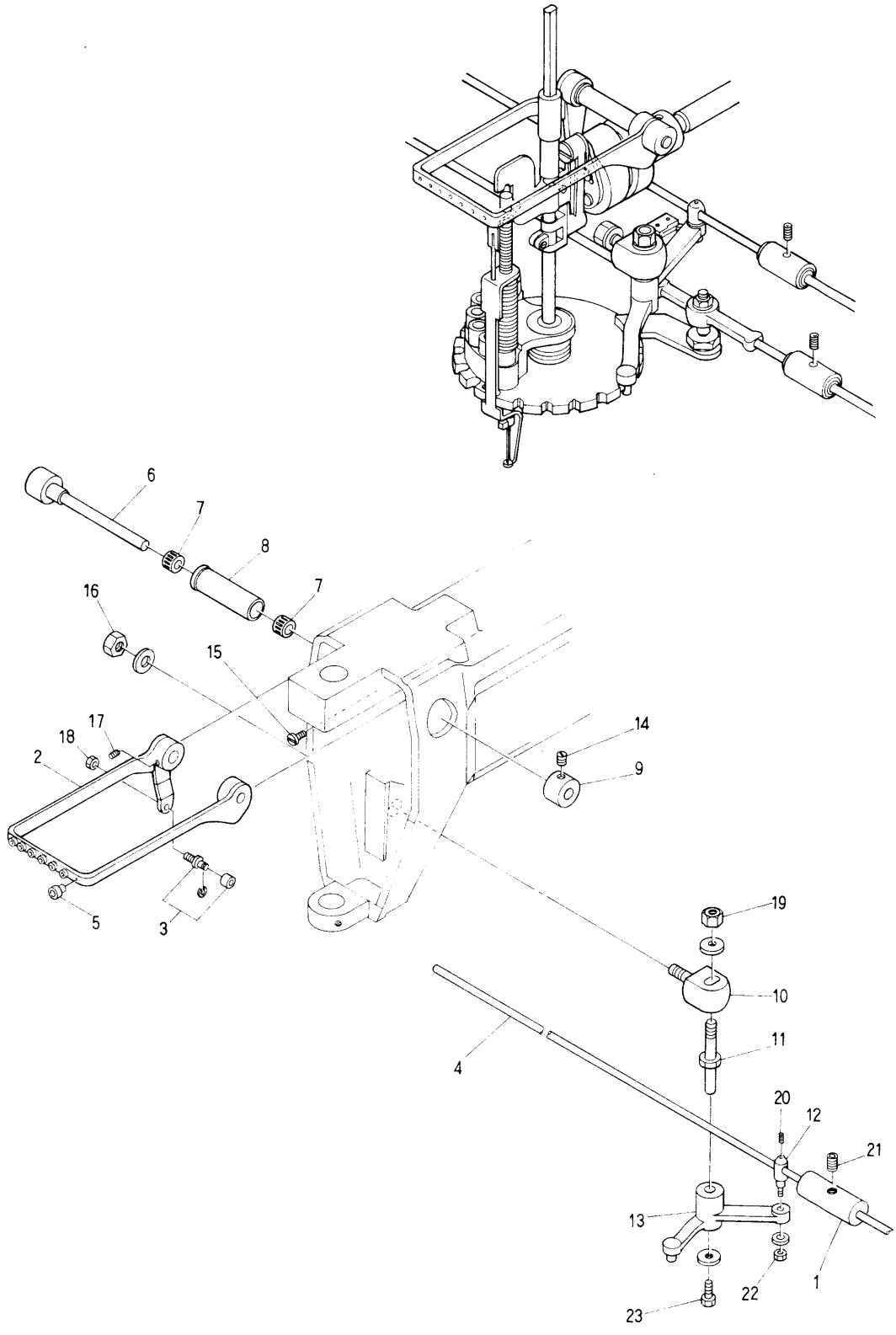

⑤ Needle bar・Take up lever mechanism Ⅰ (7)

ITEM	PART No.	LIST No.	DESCRIPTION	Q'TY	REMARK
1	3338F01	KF330381	Lock bar hand grip	1	
2	2383T00	MT230830	Take up lever (7needles)	1/H	
3	2368F00	KF230530	Take up lever roller assy	1/H	
4	3341C	KC330410	Lock connecting rod	2	
5	2358F	KF230580	Ceramic thread guide	7/H	
6	2351F	KF230510	Take up lever shaft	1/H	
7	911B2	A9011112	Needle geage 1KG×11×8T2	2/H	
8	2352T00	MT230520	Take up lever bearing case	1/H	
9	2355F	KF230550	Take up lever shaft collar	1/H	
10	2365F	KF230650	Lock lever bracket	1/H	
11	2363F	KF230630	Lock lever shaft	1/H	
12	2364F	KF230640	Lock connection rod clamp	1/H	
13	2361G	KF230610	US Lock lever	1/H	
14			Set screw (SM1/4 40×6)		
15			Screw (SM11/64 40×10)		
16			Hex. nut M10		
17			Hex. socket set screw M5×6		
18			Hex. nut (SM7/32 28)		
19			Hex. nut M8		
20			Hex. socket set screw M4×5		
21			Hex. socket set screw M5×5		
22			Hex. nut M4		
23			Hex. bolt M5×15		

⑥ Needle bar-Take up lever mechanism Ⅱ (5)

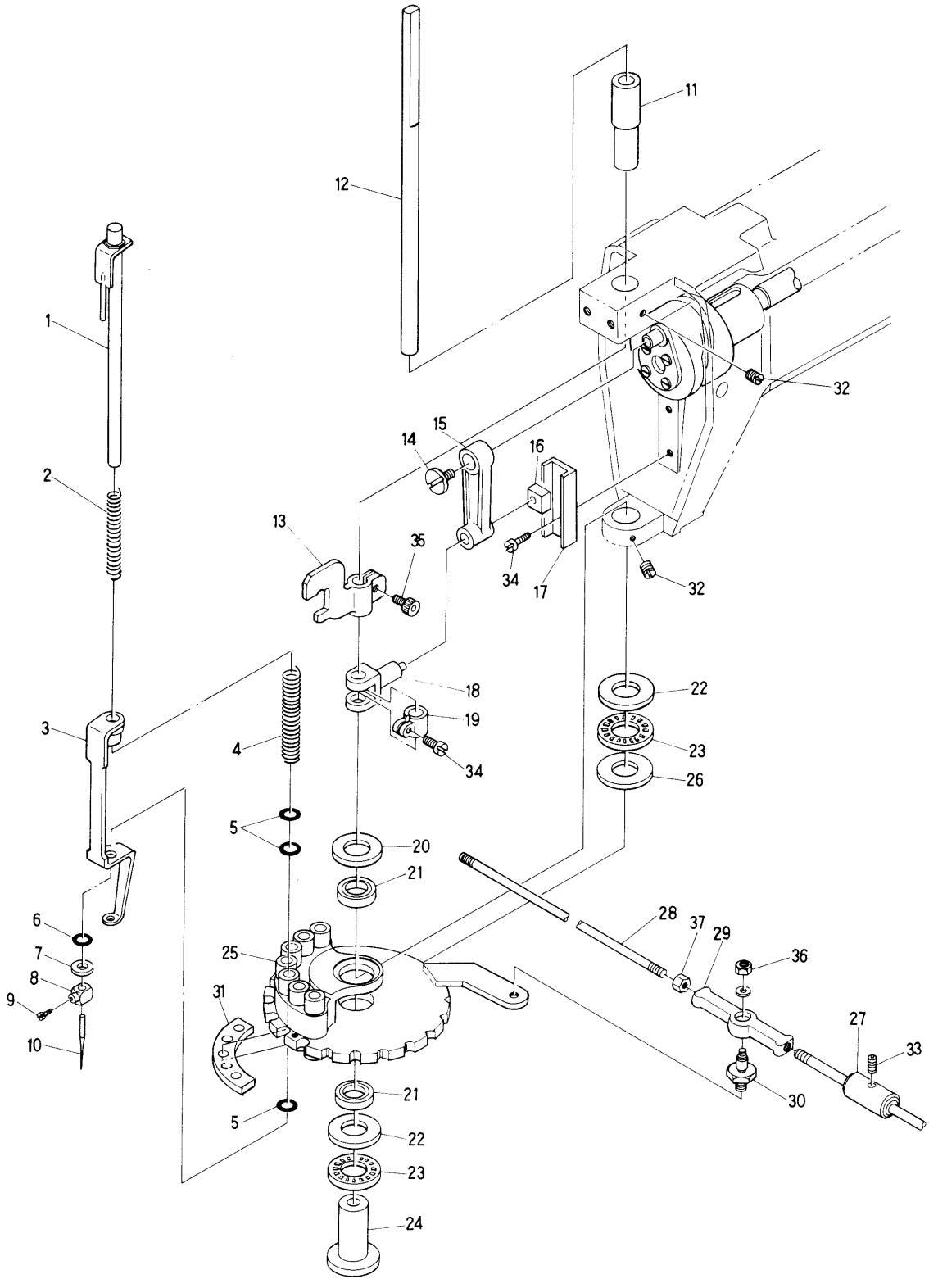

⑥ Needle bar・Table up lever mechanism Ⅱ (5)

ITEM	PART No.	LIST No.	DESCRIPTION	Q'TY	REMARK
1	2301F	KF230010	Needle bar assy	5/H	
2	2318F	KF230180	Needle bar spring (Upper)	5/H	
3	2302F	KF230020	Presser foot	5/H	
4	2321F	KF230210	Needle bar spring (Lower)	5/H	
5	2392F	KF230920	O-Ring (L)	5/H	
6	2391F	KF230910	O-Ring (S)	5/H	
7	2393F	KF230930	Specer	5/H	
8	2323F	KF230230	Needle clamp	5/H	
9	2324F	KF230240	Needle clamp screw (SM9/64)	5/H	
10	2325F	KF230250	Needle (DBXK5)	5/H	
11	2332F	KF230320	Driver shaft upper metal	1/H	
12	2331F	KF230310	Needle bar driver shaft	1/H	
13	2334F	KF230340	Needle bar driver	1/H	
14	2345F	KF230450	90° Clank screw	1/H	
15	2346F	KF230460	Clank	1/H	
16	23D7P00	HP231370	Square ball	1/H	
17	23D1P00	HP231310	Guide rail	1/H	
18	23C9P00	HP231290	Needle bar driving fork	1/H	
19	2348F	KF230480	Needle shaft clamp	1/H	
20	2312F	KF230120	Sealing metal	1/H	
21	91009	A9010009	Bearing A2015	2/H	
22	91123	A9011023	Thrust bearing (GS-1528)	2/H	
23	91121	A9011021	Thrust bearing (NTB-1528)	2/H	
24	2333F	KF230330	Bearing shaft	1/H	
25	23G6N01	KN231660	Turret plate (5)	1/H	
26	91122	A9011022	Thrust bearing (AS 1528)	1/H	
27	3338F01	KF330381	Lock bar hand grip	1	
28	3331C	KC330310520	Needle bar turret plate connecting rod L=470	1	
29	91205	A9012005	NMB RD4 0202N	1	
	91201	A9012001	NMB RD4 0202R	1	
	91203	A9012003	NMB RD4 0202L	1	
30	2336F	KF230360	Needle bar turret plate joint pin	1/H	
31	23G9N00	KN231690	Needle bar turret plate felt (5)	1/H	
32			Set screw M6×6		
33			Hex. socket set screw M5×5		
34			Screw (SM9/64 40×8)		
35			Hex. socket bolt M4×8		
36			Hex. nut M4		
37			Hex. nut M5		

(IA)7.50

⑥ Needle bar-Take up lever mechanism Ⅱ (7)

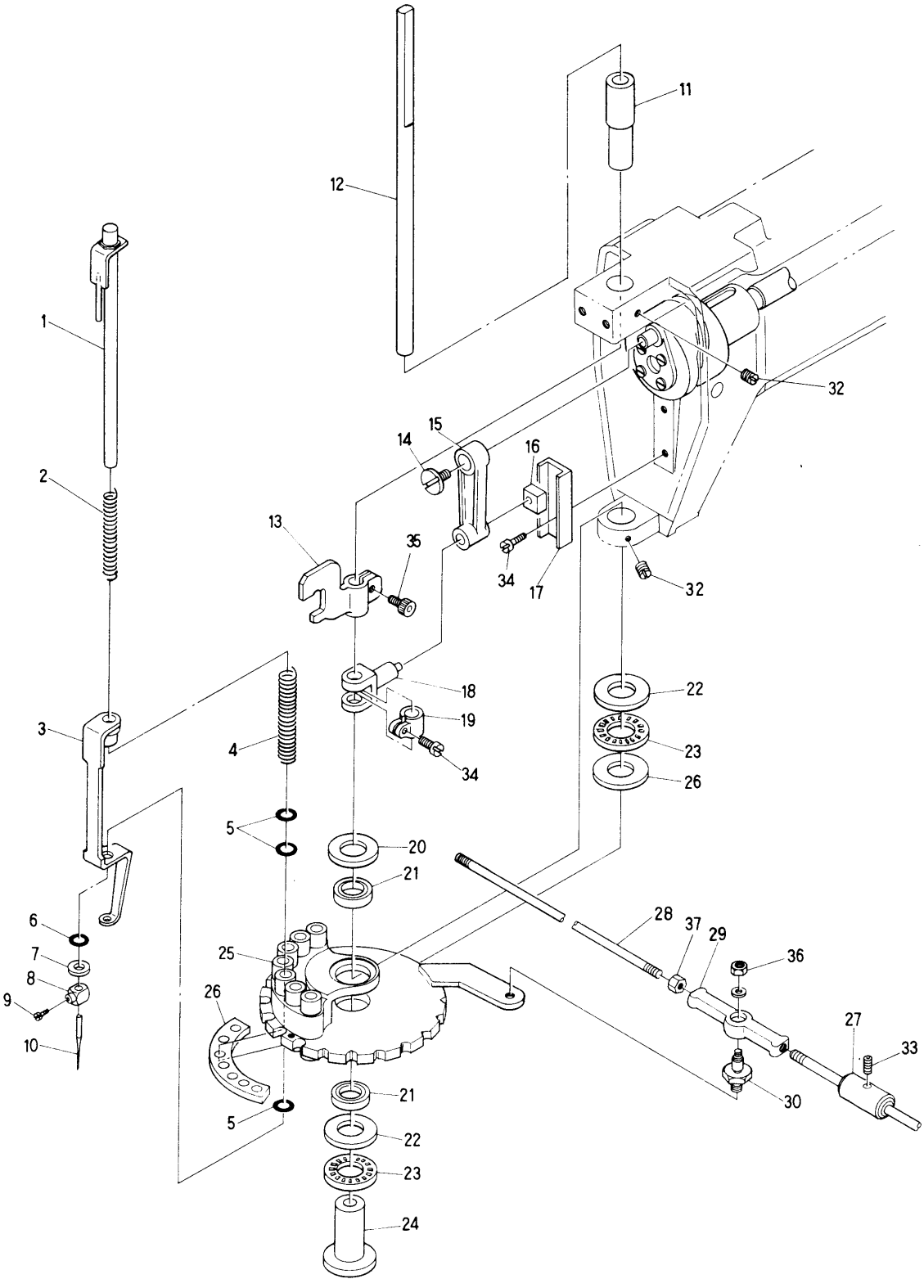

⑥ Needle bar・Table up lever mechanism Ⅱ (7)

ITEM	PART No.	LIST No.	DESCRIPTION	Q'TY	REMARK
1	2301F	KF230010	Needle bar assy	7/H	
2	2318F	KF230180	Needle bar spring (Upper)	7/H	
3	2302F	KG230020	Presser foot	7/H	
4	2321F	KF230210	Needle bar spring (Lower)	7/H	
5	2392F	KF230920	O-Ring (L)	21/H	
6	2391F	KF230910	O-Ring (S)	7/H	
7	2393F	KF230930	Specer	7/H	
8	2323F	KF230230	Needle clamp	7/H	
9	2324F	KF230240	Needle clamp screw (SM9/64)	7/H	
10	2325F	KF230250	Needle (DBXK5)	7/H	
11	2332F	KF230320	Driver shaft upper metal	1/H	
12	2331F	KF230310	Needle bar driver shaft	1/H	
13	2334C	KF230340	Needle bar driver	1/H	
14	2345F	KF230450	90° Clank screw	1/H	
15	2346F	KF230460	Clank	1/H	
16	23D7P00	HP231370	Square ball	1/H	
17	23D1P00	HP231310	Guide rail	1/H	
18	23C9P00	HP231290	Needle bar driving fork	1/H	
19	2348F	KF230480	Needle shaft clamp	1/H	
20	2312F	KF230120	Sealing metal	1/H	
21	91009	A9010009	Bearing A2015	2/H	
22	91123	A9011023	Thrust bearing (GS-1528)	2/H	
23	91121	A9011021	Thrust bearing (NTB-1528)	2/H	
24	2333F	KF230330	Bearing shaft	1/H	
25	23G7N01	KN231670	Turret plate	1/H	
26	91122	A9011022	Thrust bearing (AS 1528)	1/H	
27	3338F01	KF330381	Lock bar hand grip	1	
28	3331C	KC330310520	Needle bar turret plate connecting rod L=470	1	
29	91205	A9012005	NMB RD4 0202N	1	
	91201	A9012001	NMB RD4 0202R	1	
	91203	A9012003	NMB RD4 0202L	1	
30	2336F	KF230360	Needle bar turret plate joint pin	1/H	
31	23H0N00	KN231700	Needle bar turret plate felt (7)	1/H	
32			Set screw M6×6		
33			Hex. socket set screw M5×5		
34			Screw (SM9/64 40×8)		
35			Hex. socket bolt M4×8		
36			Hex. nut M4		
37			Hex. nut M5		

⑦ Color change mechanism

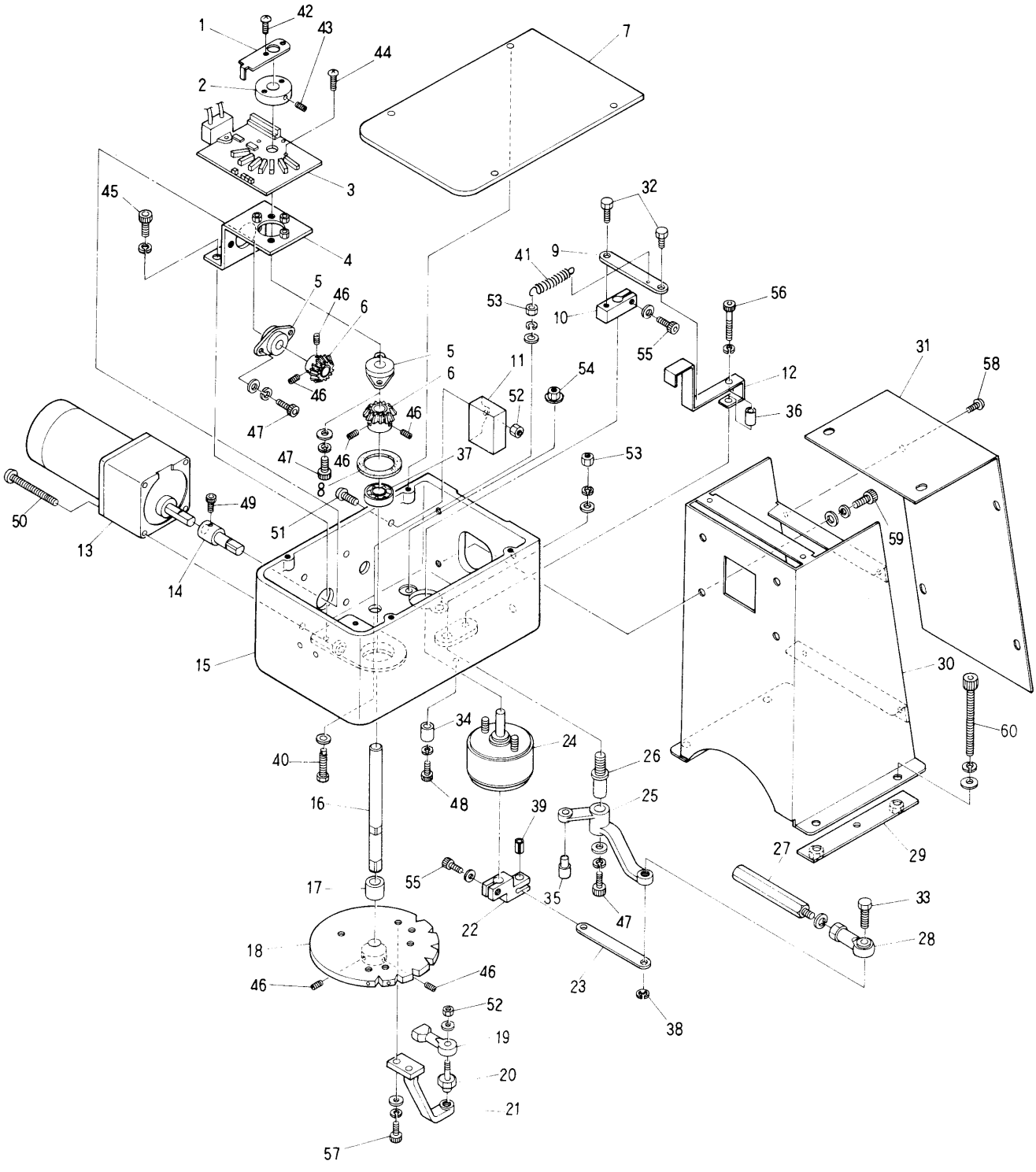

⑦ Color change mechanism

ITEM	PART No.	LIST No.	DESCRIPTION	Q'TY	REMARK
1	3328H01	HH330281	Detection plate	1	
2	3317C	KC330170	Plate collar	1	
3	55T0100	EBN00660	SDU color change board (7020-4100)	1	
4	33J1U00	KU331910	Turret drive base	1	
5	91149	A9011049	FYH, oiless pyro 80 (80FL-10)	2	
6	3362H	HH330620	IM25T straight miter bevel	2	
7	33H4U00	KU331740	Lock detection plate (Drive plate)	1	
8	912F0	A9012150	Trust washer (TW1530)	1	
9	33J4P00	HP331940	Lock detacive plate (Drive plate)	1	
10	33J6P00	HP331690	Lock detacive plate (Drive lever)	1	
11			Condenser (3381H accessory)	1	
12	33J3U00	KU331930	Lock detacive plate	1	
13	3381H	HH330810	Geard motor RM-F6A5PC3-AS-180	1	
14	33F7P00	HP331570	Geard motor shaft	1	
15	33J0U00	KU331900	Turret control box	1	
16	33F8P00	HP331580	Needle turning shaft	1	
17	33F9P00	HP331590	Turn table adjusting collar	1	
18	3315G	KG330150	US Control turning plate	1	
19	91201	A9012001	NMB RD4 020R	1	
20	33G6P00	HP331660	Turret plate joint pin	1	
21	33F2P00	HP331520	Turret turn table lever	1	
22	33F5P00	HP331550	Lock solenoid lever	1	
23	33J4P00	HP331940	Lock detection plate (Drive plate)	1	
24	95611	A9056011	Rotary solenoid 6SR25-27X3,4,9	1	
25	33F3P01	HP331531	Turret lock lever	1	
26	2363F	KF230630	Lock lever shaft	1	
27	3351C	KC330510	Hex. connecting bar (L)	1	
28	91202	A9012002	NMB PR-6	1	
29	33H3U00	KU331730	Turret box stay fixing plate	2	
30	33H1U00	KU331710	Turret box fixing stay	1	
31	33H2U00	KU331720	Turret box fixing stay cover	1	
32	740F3Q0	HQ741F30	Bell crank bolt	2	
33	33F6P00	HP331560	Lock lever pin	1	
34	3367H	HH330670	Stopper eccentric	1	
35	2362F	KF230620	Lock lever roller	1	
36	33J5P00	HP331950	Lock detection plate (Turret shaft)	1	
37	91001	A9010001	Bearing (6000zz)	1	
38	91255	A9012055	E-ring $\phi 4$	1	
39	912E3	A9012143	Spring $\phi 6$ L=12	1	
40	33H5U00	KU331750	Lock sub spring pin	1	
41	33H6U00	KU331760	Lock sub spring	1	
42			Screw M3×6		
43			Hex. socket set screw M5×8		
44			Screw M3×4		
45			Hex. socket bolt M6×12		

⑦ Color change mechanism

ITEM	PART No.	LIST No.	DESCRIPTION	Q'TY	REMARK
46			Hex. socket set screw M5×6		
47			Hex. socket bolt M5×10		
48			Hex. socket bolt M4×20		
49			Hex. socket bolt M4×6		
50			Pan screw M4×60		
51			Screw M4×15		
52			Hex. nut M4		
53			Hex. nut M8		
54			Hex. nut M5		
55			Hex. socket bolt M5×12		
56			Hex. socket bolt M4×30		
57			Hex. socket bolt M5×12		
58			Screw M4×8		
59			Hex. socket bolt M6×15		
60			Hex. socket bolt M6×50		

⑧ Thread guide mechanism (5)

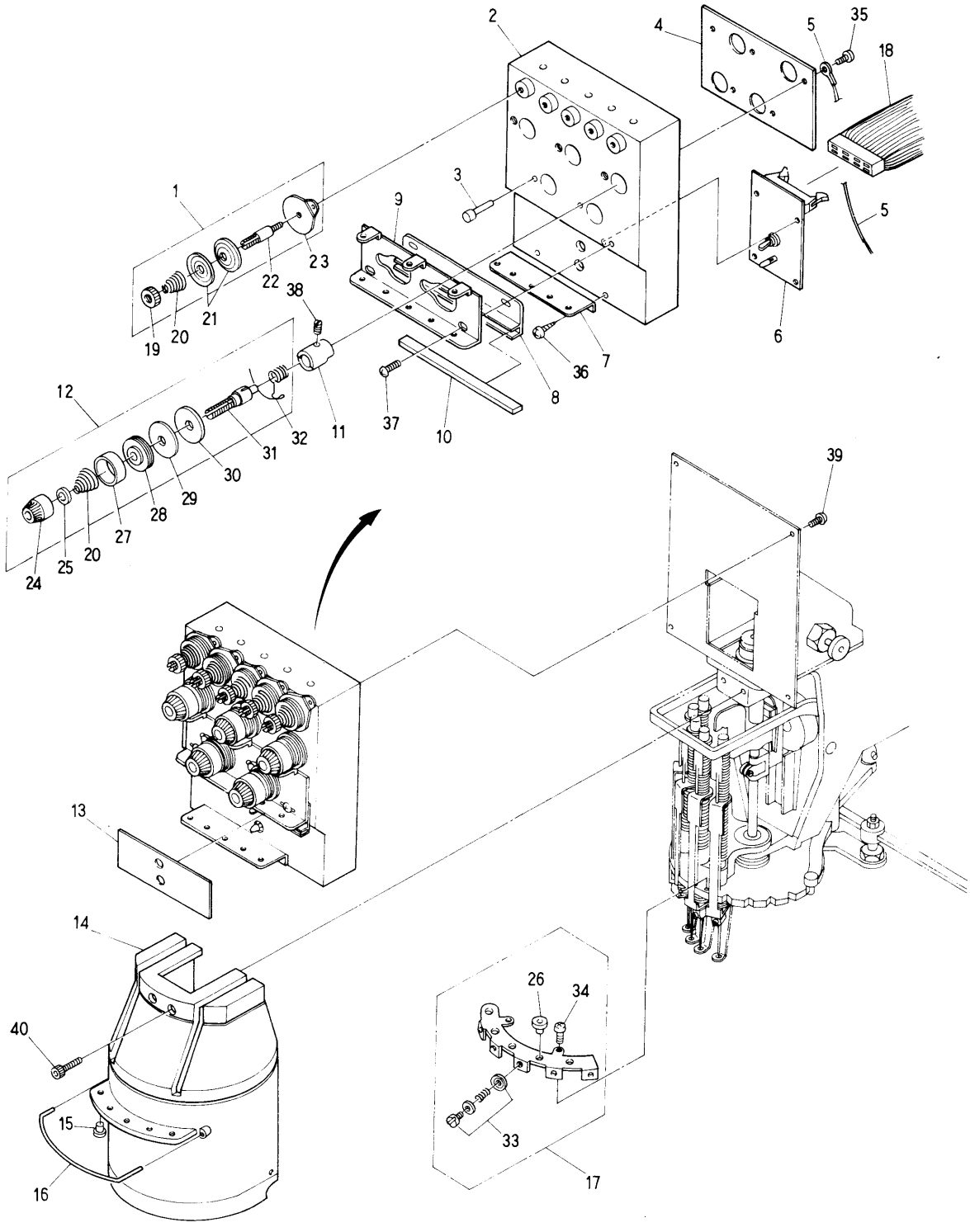

⑧ Thread guide mechanism (5)

ITEM	PART No.	LIST No.	DESCRIPTION	Q'TY	REMARK
1	24A2G	HG241020	Upper tension unit complete US	5/H	
2	24B1P00	HP241110	Tension base (5)	1/H	
3	24B6P00	HP241160	Upper thread detection pin	5/H	
4	24D7P01	HP241371	Tension earth plate (5)	1/H	
5	24D9P00	HP241390	Tension earth cable	5/H	
6	55T0090	EBN00650	Thread cutting detection board (7020-4200)	1/H	
7	24B9P00	HP241190	Second thread guide plate (5)	1/H	
8	24E5P00	HP241450	Thread guide felt fixing plate (5)	1/H	
9	24B7P00	HP241170	First thread guide (5)	1/H	
10	24E7P00	HP241470	Thread guide felt (5)	1/H	
11	24B5P00	HP241150	Tension base (with screw)	5/H	
12	24E1P00	HP241410	Dial type tension unit complete	5/H	
13	24E0P00	HP241400	Tension base ravel	1/H	
14	2562P00	HP250620	Sewing head cover (5)	1/H	
15	2493F	KF240930	Thread guide (ceramic) ϕ11	5/H	
16	2558P01	HP250581	Sewing head cover thread guide	1/H	
17	2505P00	HP250050	Thread end trap unit assy (UF)	1/H	
18	5141U00	KU510410	Flat cable AT-706 (S-2500×1100×6)	1	
19	2471F	KF240710	Tension nut	5/H	
20	2436H	HH240360	Tension spring	10/H	
21	2425G01	KG240251	Tension plate	10/H	
22	2416F	KF240160	Tension bar	5/H	
23	2422G	KG240220	Tension unit thread guide US	5/H	
24	2470F	KF240700	Tension dial	5/H	
25	2478F	KF240780	Rachet washer	5/H	
26	2491F	KF240910	Thread guide (ceramic) ϕ8	5/H	
27	2476F	KF240760	Tension cover	5/H	
28	2428F	KF240280	Tension Turnning plate	5/H	
29	2474F	KF240740	Felt plate	5/H	
30	2475F	KF240750	Tension plate	5/H	
31	2417F	KF240170	Tension bar	5/H	
32	2482N00	KN240820	Spring (SWP 0.45)	5/H	
33	2520F	KF250200	Plate set	5/H	
34			Pan screw (SM9/64 40 ×10)		
35			Pan screw M3×4		
36			Screw M3.5×8		
37			Screw M4×6		
38			Set screw (SM11/64 40×6)		
39			Pan screw M4×10		
40			Hex. socket bolt M5×10		

⑧ Thread guide mechanism (7)

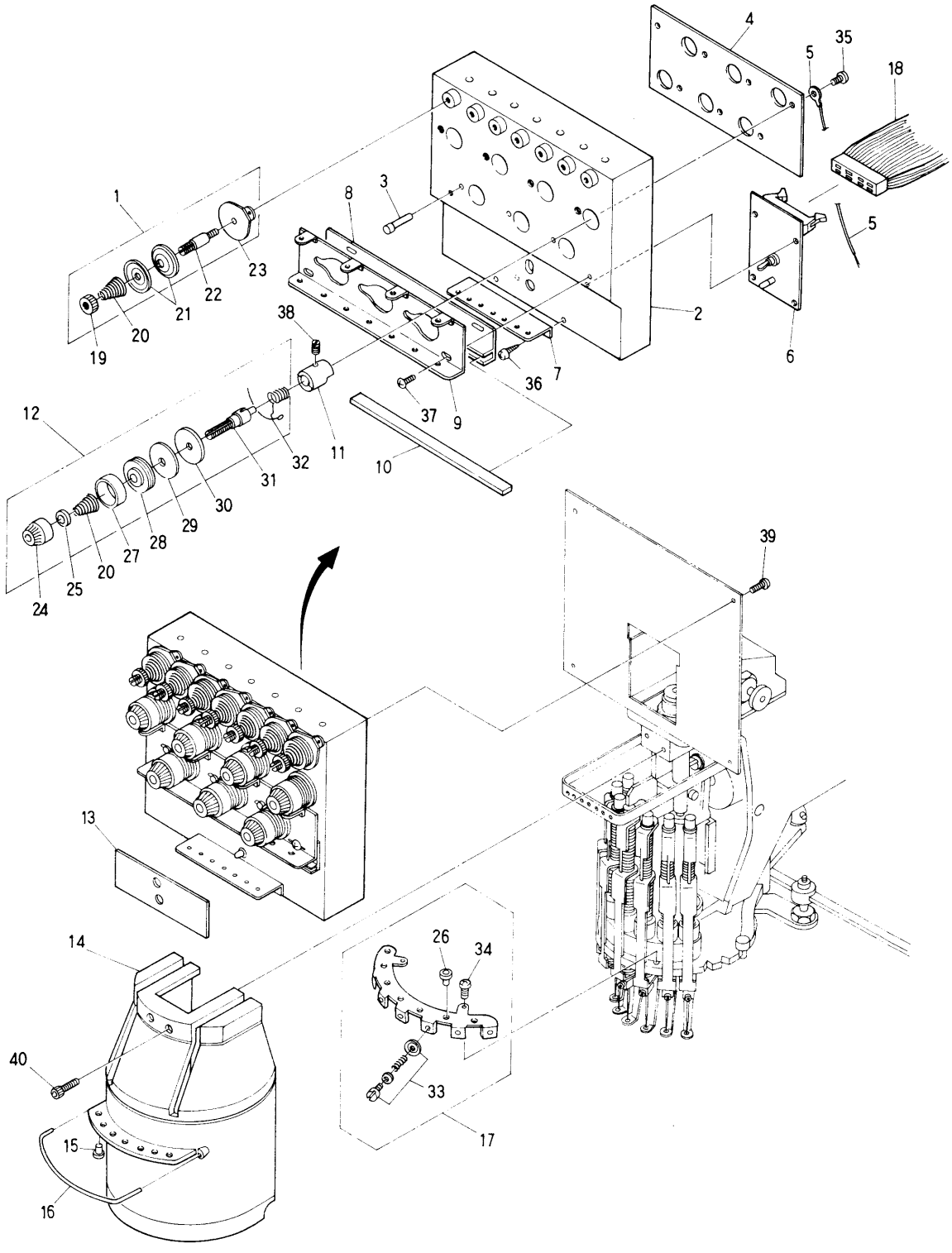

⑧ Thread guide mechanism(7)

ITEM	PART No.	LIST No.	DESCRIPTION	Q'TY	REMARK
1	24A2G	HG241020	Upper tension unit complete	7/H	
2	24B2P00	HP241120	Tension base (7)	1/H	
3	24B6P00	HP241160	Upper thread detection pin	7/H	
4	24D8P01	HP241381	Tension earth plate (7)	1/H	
5	24D9P00	HP241390	Tension earth cable	7/H	
6	55T0090	EBN00650	Thread cutting detection board (7020-4200)	1/H	
7	24C0P00	HP241200	Second thread guide plate (7)	1/H	
8	24E6P00	HP241460	Thread guide felt fixing plate (7)	1/H	
9	24B8P00	HP241180	First thread guide (7)	1/H	
10	24E8P00	HP241480	Thread guide felt (7)	1/H	
11	24B5P00	HP241150	Tension base (with screw)	7/H	
12	24E1P00	HP241410	Dial type tension unit complete	7/H	
13	24E0P00	HP241400	Tension base ravel	1/H	
14	2563P00	HP250630	Sewing head cover (7)	1/H	
15	2493F	KF240930	Thread guide (ceramic) ϕ11	7/H	
16	2558P01	HP250581	Sewing head cover thread guide	1/H	
17	2501G	HP250010	Thread end trap unit assy (UF)	1/H	
18	5141U00	KU510410	Flat cable AT-706 (S-2500×1100×6)	1	
19	2471F	KF240710	Tension nut	7/H	
20	2436H	HH240360	Tension spring	14/H	
21	2425G01	KG240251	Tension plate US	14/H	
22	2416F	KF240160	Tension bar	7/H	
23	2422G	KG240220	Tension unit thread guide (US)	7/H	
24	2470F	KF240700	Tension dial	7/H	
25	2478F	KF240780	Rachet washer	7/H	
26	2491F	KF240910	Thread guide (ceramic) ϕ8	7/H	
27	2476F	KF240760	Tension cover	7/H	
28	2428F	KF240280	Tension Turnning plate	7/H	
29	2474F	KF240740	Felt plate	7/H	
30	2475F	KF240750	Tension plate	7/H	
31	2417F	KF240170	Tension bar	7/H	
32	2482N00	KN240820	Spring (SWP 0.45)	7/H	
33	2520F	KF250200	Plate set	7/H	
34			Pan screw (SM9/64 40 ×10)		
35			Pan screw M3×4		
36			Screw M3.5×8		
37			Screw M4×6		
38			Set screw (SM11/64 40×6)		
39			Pan screw M4×10		
40			Hex. socket bolt M5×10		

⑨ Jamp mechanism

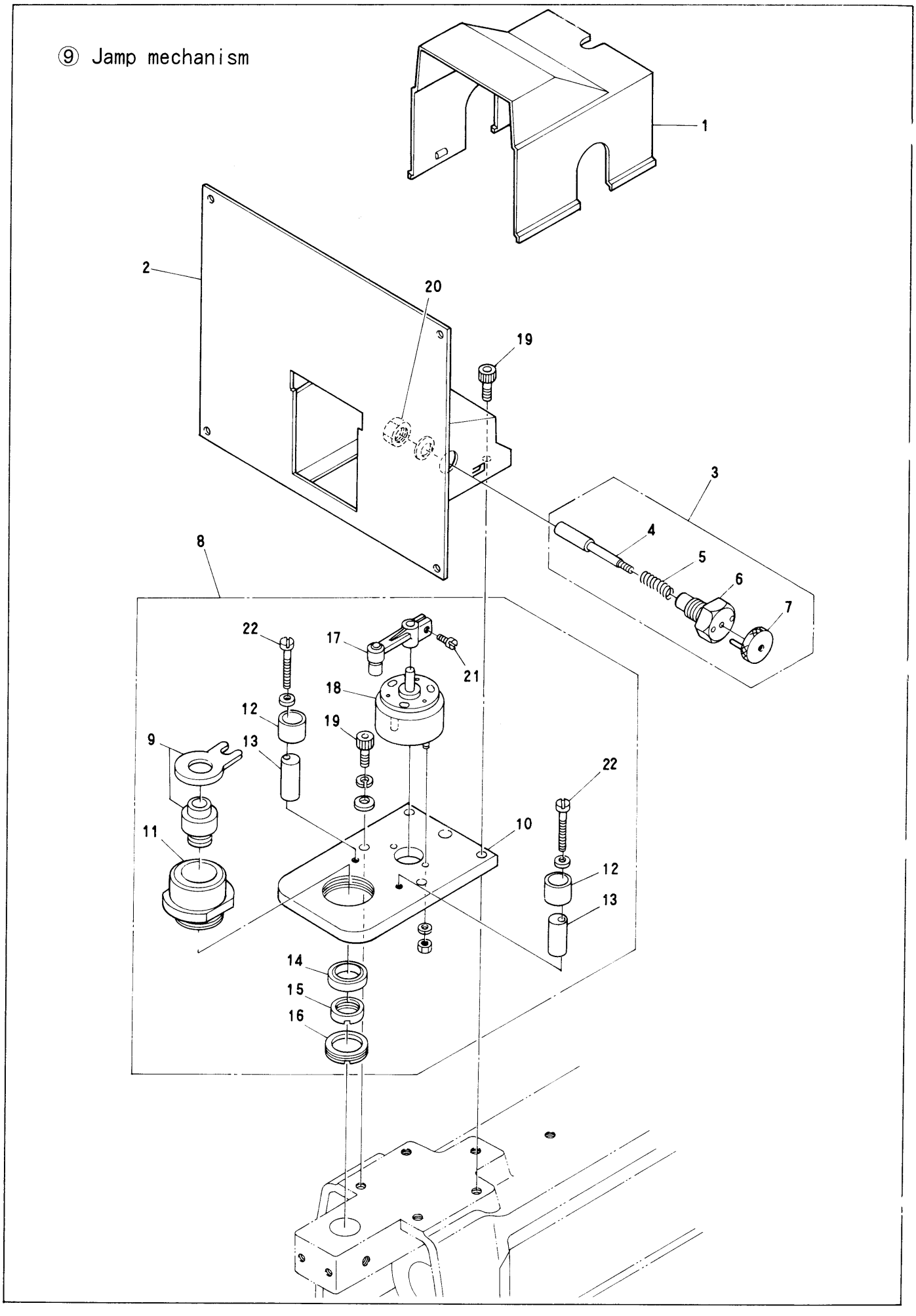

⑨ Jamp mechanism

ITEM	PART No.	LIST No.	DESCRIPTION	Q'TY	REMARK
1	24C1P00	HP241210	Tension cable cover	1/H	
2	24B3P00	HP241130	Tension base (5)	1/H	
	24B4P00	HP241140	Tension base (7)	1/H	
3	2403F	KF240030	Canceling pin assy	1/H	
4	2453F	KF240530	Canceling pin	1/H	
5	2456F	KF240560	Spring	1/H	
6	2455F	KF240550	Bolt	1/H	
7	2452F	KF240520	Canceling knob	1/H	
8	2419P00	HP240190	Jampping set	1/H	
9	2420F00	KF240200	Rotor lever set	1/H	
10	23D3P00	KF240440	Solenoid base	1/H	
11	2445F	KF240450	Rotor case	1/H	
12	2449F	KF240490	Stopper eccentric cover	2/H	
13	2448F	KF240480	Stopper eccentric	2/H	
14	91009	A9010009	Bearing A2015	1/H	
15	2447F	KF240470	Ring nut (S)	1/H	
16	2446F	KF240460	Ring nut (L)	1/H	
17	2442F	KF240420	Rotor lever	1/H	
18	2461F	KF240610	Rotary solenoid (3ER25-35)	1/H	
19			Hex. socket bolt M5×15		
20			Hex. nut M12		
21			Screw (SM9/64 40×8)		
22			Screw M4×25		

⑩ Option

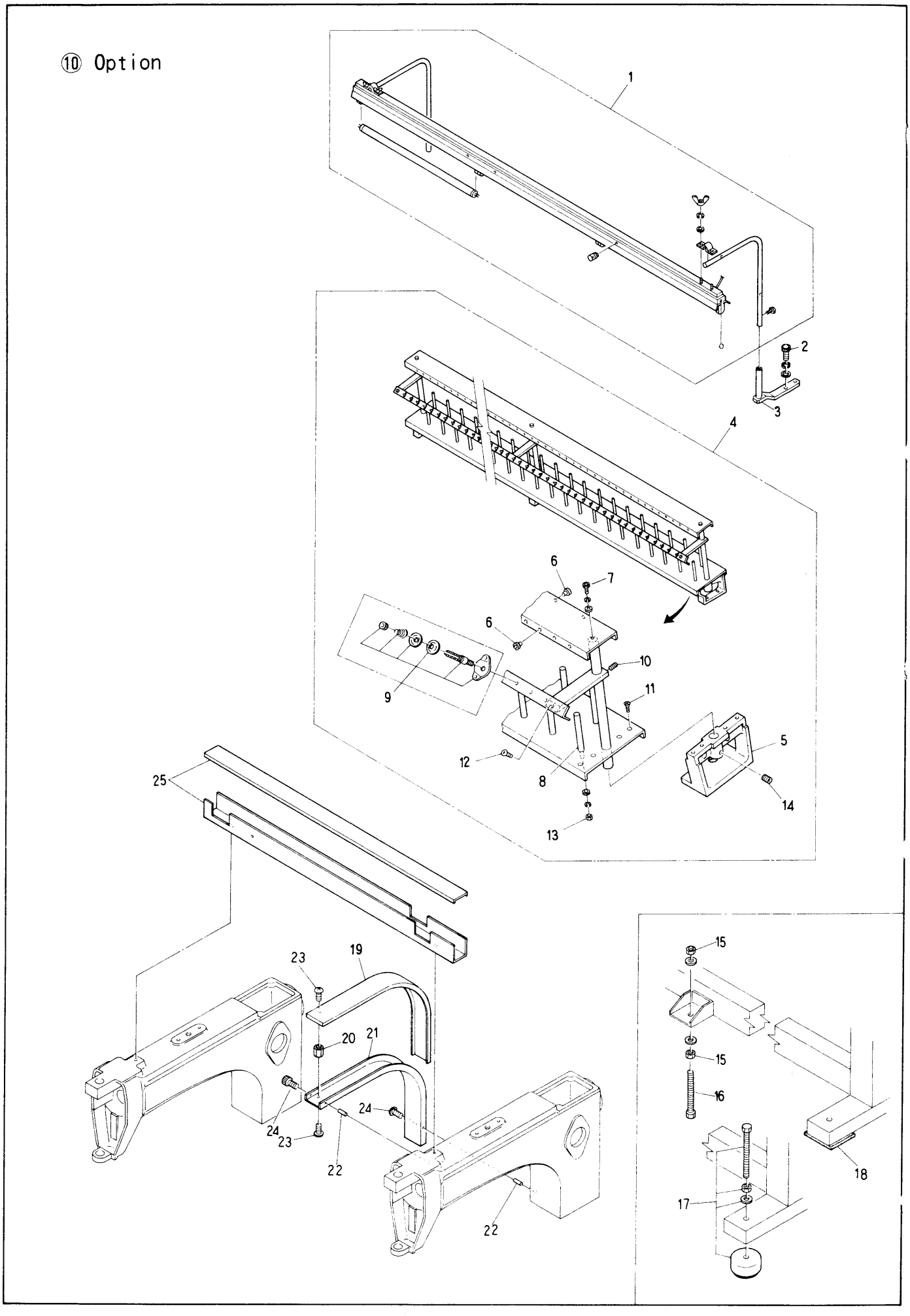
1
2
3
4
5
6
6
7
8
9
10
11
12
13
14
15
15
16
17
18
19
20
21
22
22
23
23
24
24
25

⑩ Option (※Change the PART NO. by machine type) H=Head Q'ty

ITEM	PART No.	LIST No.	DESCRIPTION	Q'TY	REMARK
1	7130F	KF710300	LRP 4012K 15/16LG	1	
2		KF710110	Hex. socket bolt M8×45		
3	7116G01	KF710161		2	
4	7138A	MA710380	Thread stand (AT-106-P520)	1	※
5	7179P00	HP710790	Thread stand base	(R 1 L 1	
6	2490F00	KF240900	Thread guide ceramic		
7	7126HJ	KC710260	Hex. socket bolt M6×15		
8	7128F	KF710280	Thread stand bar		
9	24A3G01	KG241031	Thread stand tension unit complete		
10	2471F	KF240710	Hex. socket set screw M6×8		
11	2436H	HH240360	Screw M4×12		
12	2425G01	KG240251	Screw M5×6		
13	2416F	KF240160	Hex. nut M5		
14	2421G01	KG240211	Hex. socket screw M5×8		
15			Hex. nut M16		
16	1292H	HH120920	Center mount bolt	4	
17	1197C	KC110970	Machine base pad P1012(100×100)	4	For interior
18	1290H	HH120900	Mount set 140×70	4	For export
19	5168T00	MT510680	Cable duct N04 cover	1	
20	5179T00	MT510790	Cable duct nut	2	
21	5167T00	MT510670	Cable duct N04	1	
22	912K2	A9012202	Specer 6×11	2	
23			Screw M4×6		
24			Hex. socket bolt M4×15		
25	5157N00	KN510570	Cable duct	1	

⑪ Connecting rod mechanism

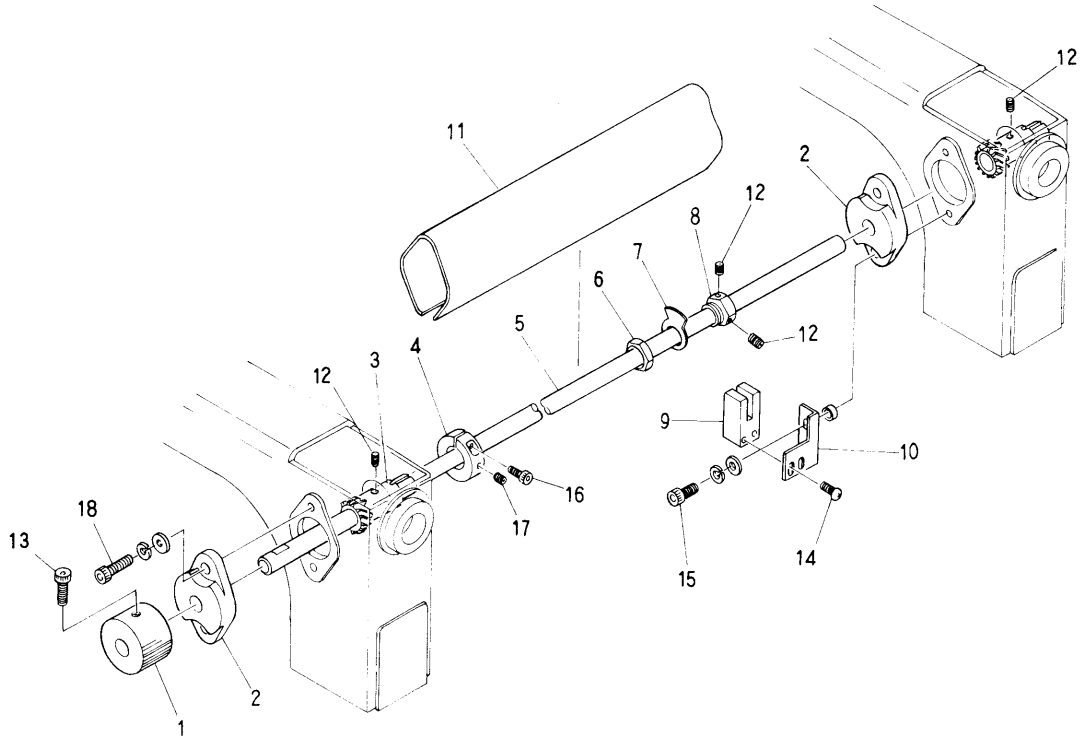

⑪ Connecting rod mechanism

Head Q'ty=H

ITEM	PART No.	LIST No.	DESCRIPTION	Q'TY	REMARK
1	3259C	KC320590	Hand pulley	1	
2	3204F	KF320040	Connecting bearing cover assy		
3	3251F	KF320510	Connecting gear (L)		H－1
4	3252F	KF320520	Connecting gear clamp		H－1
5	31R7U01	KU312771	Driving shaft (AT-704,706,708)	1	
6	5418F	KF540180	Detection plate nut	1	
7	5416U00	KU540160	Lower thread detection plate	1	
8	5417F	KF540170	Detection plate screw	1	
9	5435F	KF540350	TLPP-24	1	
10	3116U00	KU310160	Main shaft origin point sensor bracket	1	
11	3231C	KC320310520	Connecting shaft cover L=435		H－1
12			Hex. socket set screw M6×6		
13			Hex. socket bolt M6×12		
14			Screw M4×10		
15			Hex. socket bolt M6×40		
16			Hex. socket bolt M6×22		
17			Hex. socket set screw M6×10		
18			Hex. socket bolt M6×25		

⑫ Drive mechanism

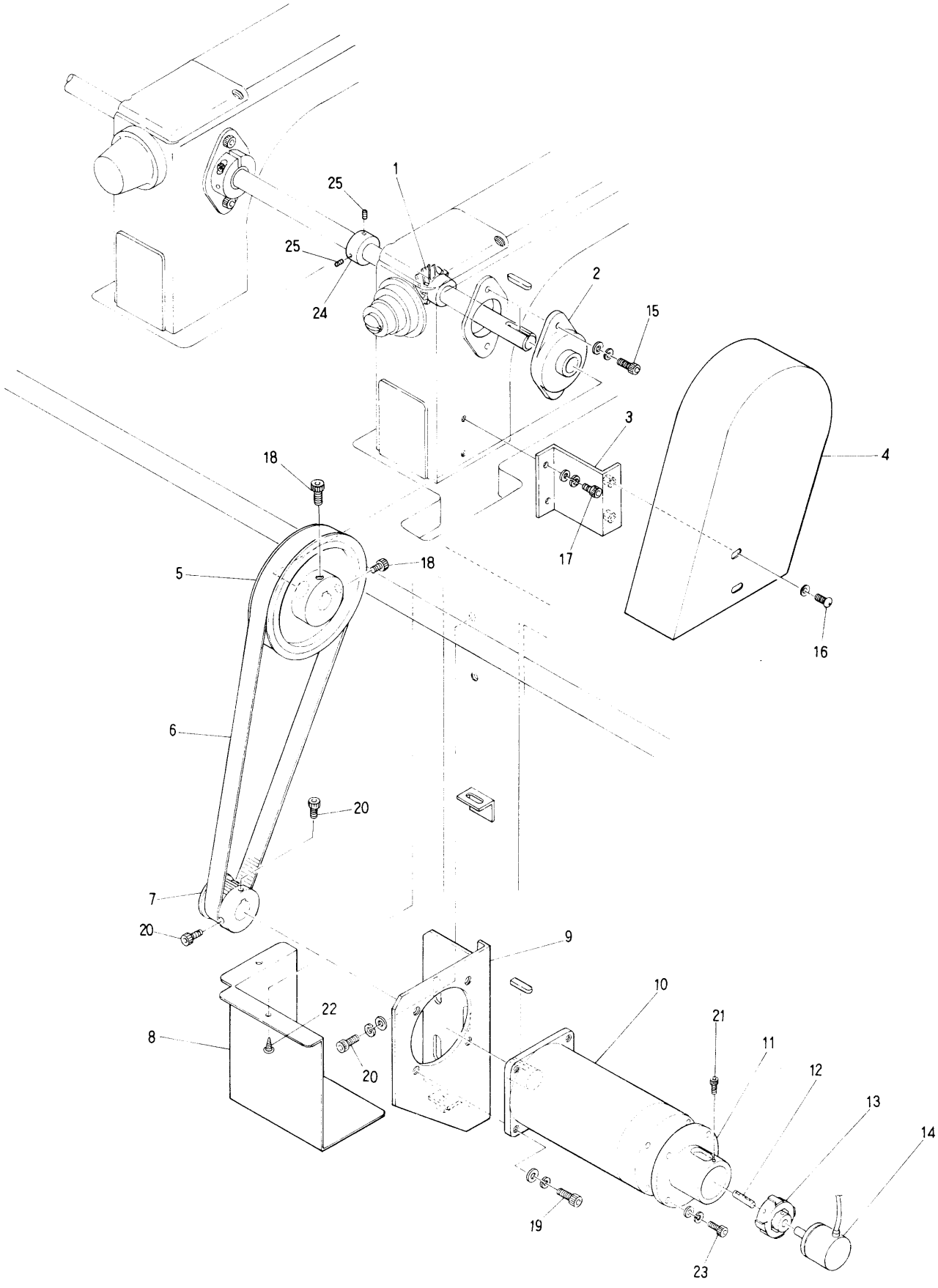

⑫ Drive mechanism

ITEM	PART No.	LIST No.	DESCRIPTION	Q'TY	REMARK
1	3253F	KF320530	Connecting gear (M)	1	
2	91142	A9011042	FYH BLF202	1	
3	31R5U00	KU312750	Belt cover fixing bracket	1	
4	31R4U00	KU312740	Belt cover	1	
5	31R3U00	KU312730	Timing pulley (P78-5M2-20-6F)	1	
6	920A6	A9020106	Timing Belt 870-5M2-20(75174)	1	
7	31R2U00	KU312720	Motor pulley (P26-5M2-20-6F)	1	
8	3115U00	KU310150	Pulley cover (AT-704,706)	1	
9	3108U01	KU310081	Motor base (AT-706,708)	1	
	3107U01	KF310071	Motor base (AT-704)	1	
10	3113U00	KU310130	DC motor (DTM-70150)(706)	1	
	3113T00	MT310130	DC motor (DTM-5270C)(704,702)	1	
11	31DET00	MT314420	Encorder fixing collar	1	
12	31DDT00	MT314410	Encorder shaft	1	
13	5124C	KC510240	ML-27-6 Rateral coupling	1	
14	5121T00	MT510210	Position corder (LBJ-007-600)	1	
15			Hex. socket bolt M6×30		
16			Screw M4×8		
17			Hex. socket bolt M4×10		
18			Hex. socket bolt M6×20		
19			Hex. socket bolt M8×20		
20			Hex. socket bolt M6×15		
21			Hex. socket bolt M2×12		
22			Screw M4×8		
23			Hex. socket bolt M4×12		
24	3291F	KF320910	15φ Collar	1	
25			Hex. socket set screw M6×6		

⑬ Pantograph drive mechanism Ⅰ（ＢＥＡＴ－７０６）320×520

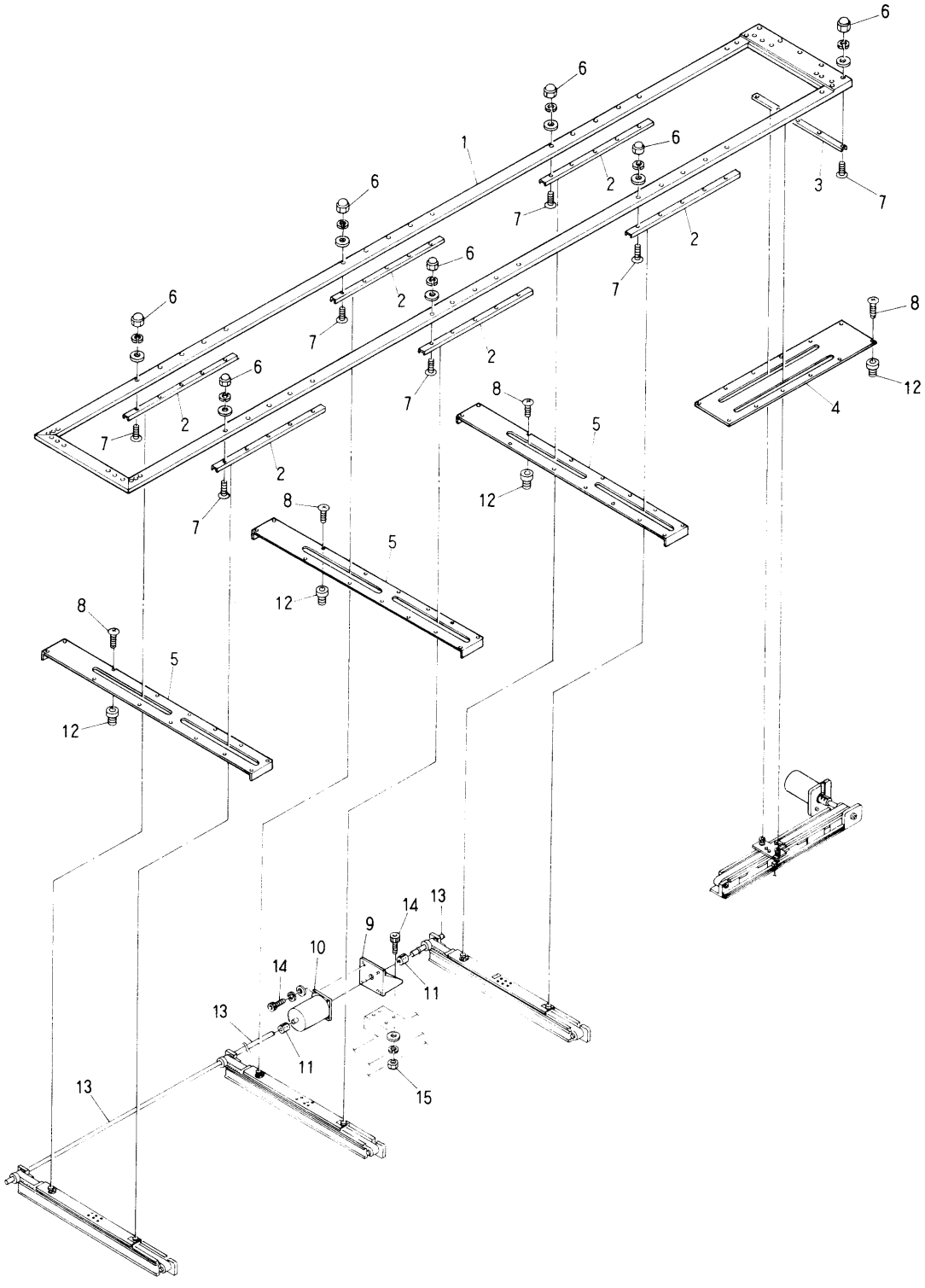

⑬ Pantograph drive mechanism I (BEAT－706) 320×520

ITEM	PART No.	LIST No.	DESCRIPTION	Q'TY	REMARK
1	4552A	MA450520	Pantograph frame assy (AT-106)	1	
2	4842N00	KN480420	Guide rail (920L)	6	
3	4835C	KC480350	Guide rail (470L)	1	
4	48A9V00	KU481090	V guide cover (520)	1	
5	4815C	KC480150	H center guide cover	3	
6			Cap nut M4		
7			Flush screw M4×12		
8			Flush screw M4×6		
9	4715U01	KU470151	H pulse motor bracket	1	
10	4711U00	KU470110	Pulse motor (103-8932-0111)	1	
11	48J3H01	HH481931	Pulse motor coupling	1	
12			nut M4		
13	4971U00	KU490710	H pulse motor connecting shaft (BEAT-706)	1	
	4972U00	KU490720	H pulse motor connecting shaft (AT-704,706)	1	
14			Hex. socket bolt M6×22		
15			Hex. nut M6		

⑬ Pantograph drive mechanism Ⅰ（ＢＥＡＴ－７０６）320×450

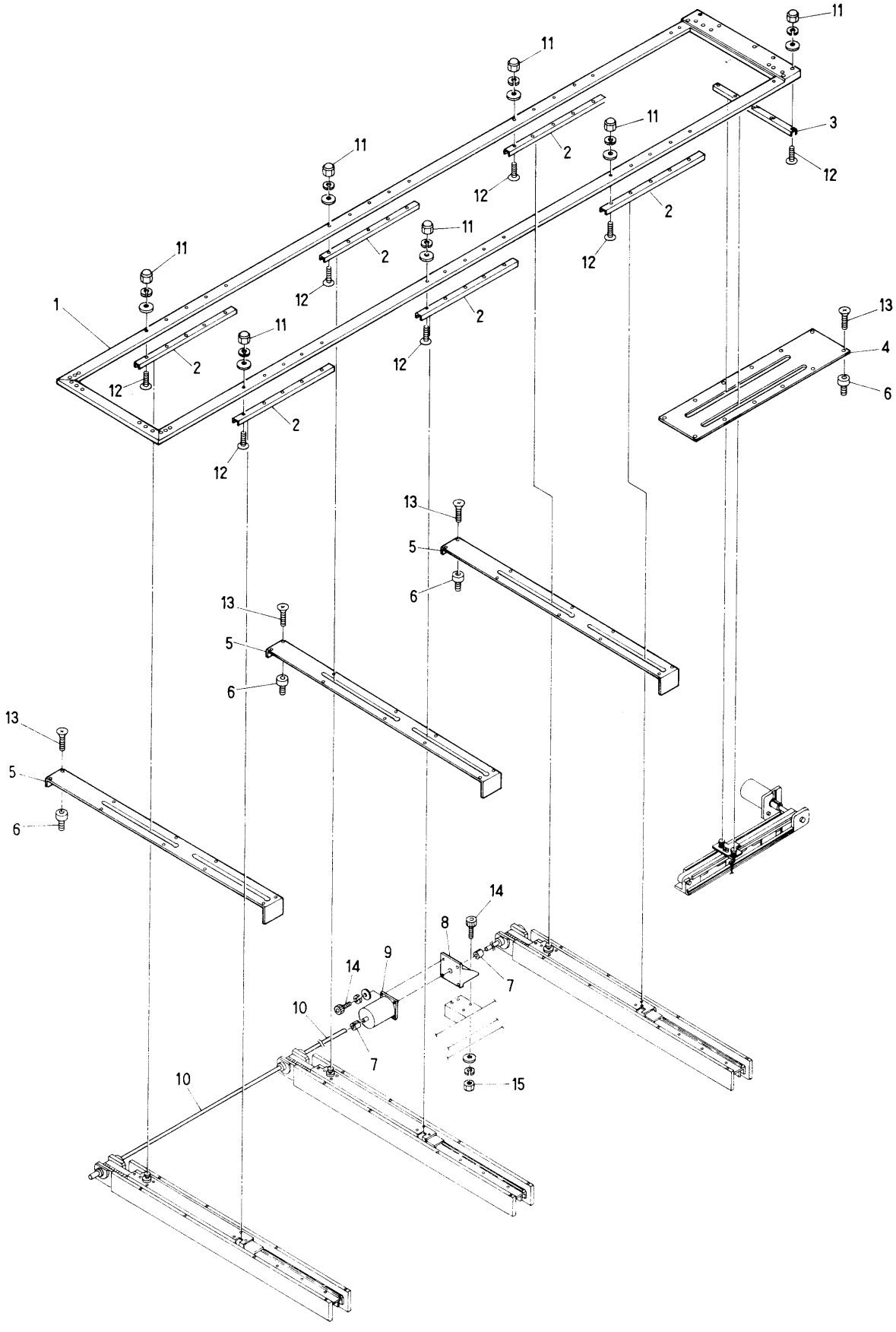

⑬ Pantograph drive mechanism Ⅰ (BEAT－706) 320×450

ITEM	PART No.	LIST No.	DESCRIPTION	Q'TY	REMARK
1	4576A	MA450760	Pantograph frame assy	1	
2	4840N00	KN480400	Guide rail (470L)	6	
3	4835C	KC480350	Guide rail (470L)	1	
4	48A5U00	KU481050	V guide cover (480)	1	
5	48C6C	KC481260	H center guide cover	3	
6			Nut M4		
7	48J3H01	HH481931	Pulse motor coupling	2	
8	4715U01	KU470151	H pulse motor bracket	1	
9	4711U00	KU470110	Pulse motor (103-8932-0111)	1	
10	4971U00	KU490710	H pulse motor connecting shaft (BEAT-706)	1	
	4972U00	KU490720	H pulse motor connecting shaft (AT-704,706)	1	
11			Cap nut M4		
12			Flush screw M4×12		
13			Flush screw M4×6		
14			Hex. socket bolt M6×22		
15			Hex, nut M6		

(IA)7.50

⑬ Pantograph drive mechanism Ⅰ（ＢＥＡＴ－７０６）320×350

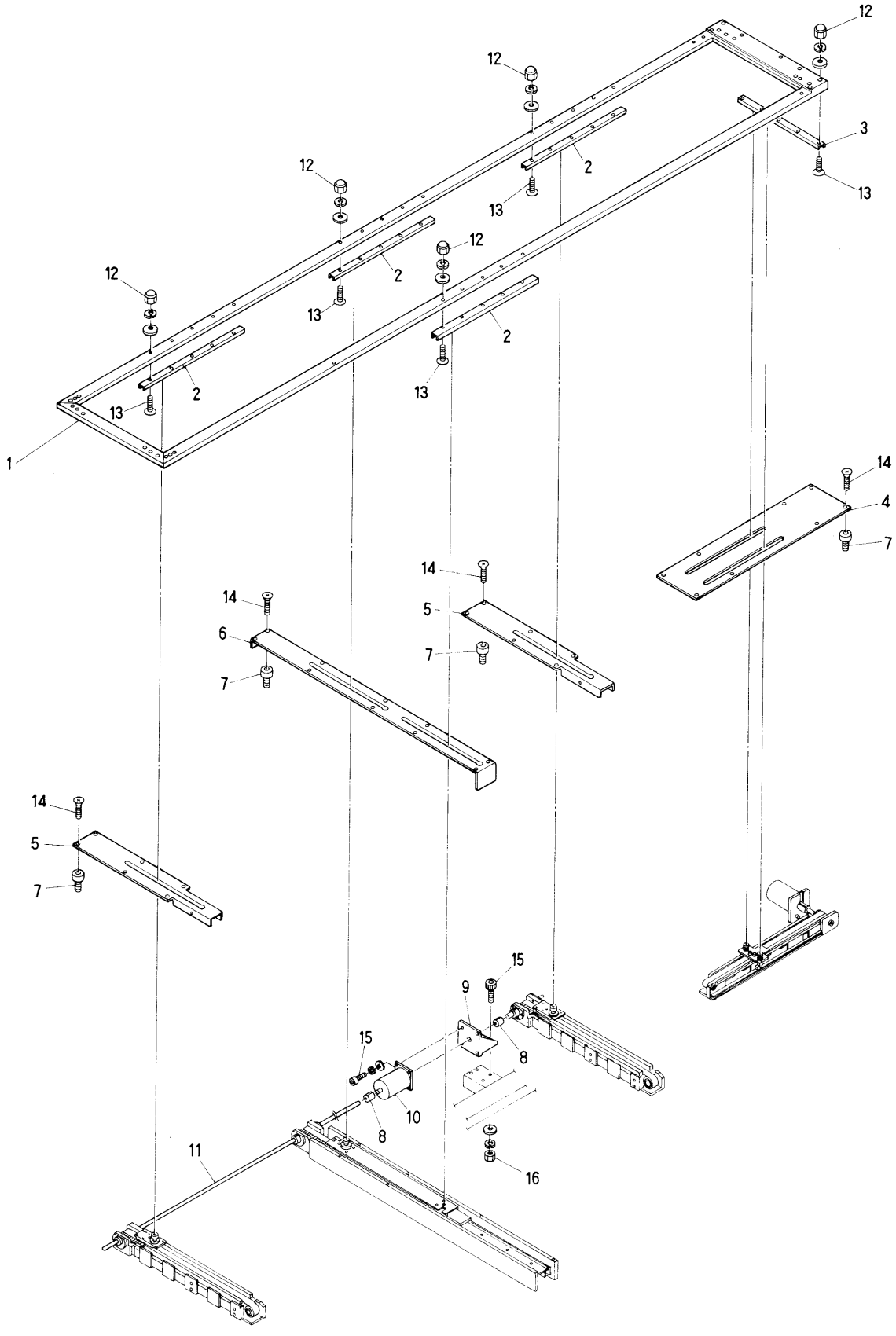

⑬ Pantograph drive mechanism I (BEAT-706) 320×350

ITEM	PART No.	LIST No.	DESCRIPTION	Q'TY	REMARK
1	4566A	MA450660	Pantograph frame assy	1	
2	4840N00	KN480400	Guide rail B(470L)	4	
3	4835C	KC480350	Guide rail (470L)	1	
4	4816U00	KU480160	V guide cover (350)	1	
5	48C5C	KC481250	H guide cover	2	
6	48C6C	KC481260	H guide cover	1	
7			Nut M4		
8	48J3H01	HH481931	Pulse motor coupling	1	
9	4715U01	KU470151	H pulse motor bracket	1	
10	4711U00	KU470110	Pulse motor (103-8932-0111)	1	
11	4971U00	KU490710	H pulse motor connecting shaft (BEAT-706)	1	
	4972U00	KU490720	H pulse motor connecting shaft (AT-704,706)	1	
12			Cap nut M4		
13			Flush screw M4×12		
14			Flush screw M4×6		
15			Hex. socket bolt M6×22		
16			Hex. nut M6		

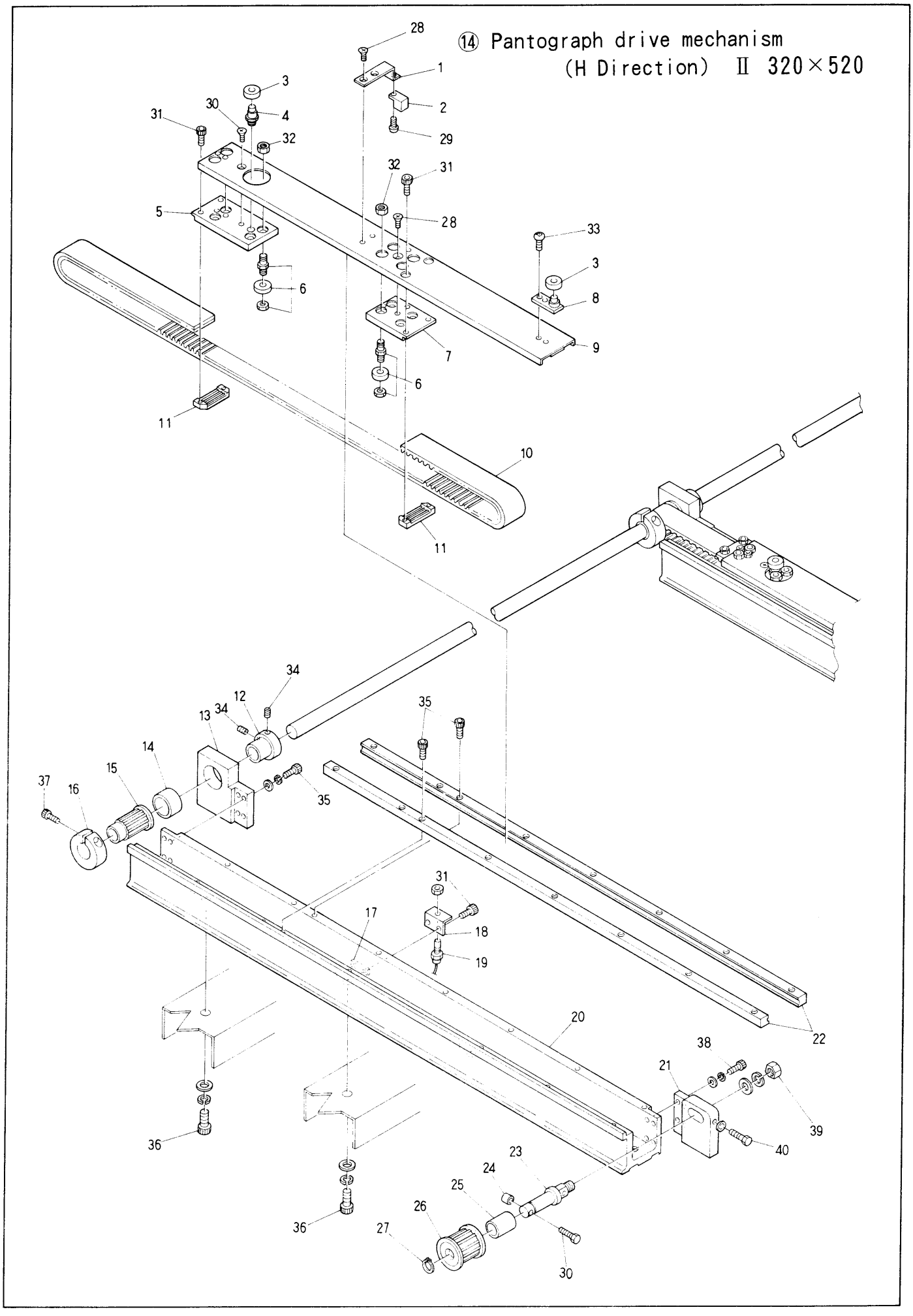
⑭ Pantograph drive mechanism
(H Direction) Ⅱ 320×520
28
1
3
2
30
4
29
31
32
32
31
5
28
33
3
6
8
7
9
6
11
10
11
34
12
34
13
35
14
15
37
16
35
31
17
18
19
20
22
38
21
39
36
40
23
24
25
26
36
27
30

⑭ Pantograph drive mechanism (H Direction) Ⅱ

320×520

ITEM	PART No.	LIST No.	DESCRIPTION	Q'TY	REMARK
1	463U02	KU460342	H pantograph magnet bracket	1	
2	95226	A9052026	Magnet M-102	1	
3	91006	A9010006	Bearing (625zz)(1650) 704	4	
	91006	A9010006	Bearing (625zz)(1650) (706 708	6	
4	48S3P00	HP482830	Bearing pin		
5	48S7H00	KN482870	H roller base (Rear)		
6	48T5P00	HP482950	Roller pin assy A		
7	48S8N00	KN482880	H roller base (Front)		
8	48S3P01	HP482831	Bearing pin		
9	48Y4U00	KU483440	H menber connecting channel (BEAT)		
10	92098	A9020098	Timing belt 300S5M2000		
11	48T4P00	HP482940	Timing belt rack (5M)		
12	48J7H	HH481970	Pulse motor connecting shaft collar		
13	48K1N00	KN482010	H guide rear pulley bracket		
14	91163	A9011063	Needle bearing TLA 2016		
15	48T9P00	HP482990	Pantograph driving pulley (Rear) S5M		
16	48J8H	HH481980	Clamping φ19		
17	4627U00	KU460270	Plate nut M3		
18	4624T00	MT460240	RS-001 Bracket (V)		
19	95224	A9052024	Switch RS-001		
20	48Y0N00	KN483400	H guide rail base (BESR)		
21	48K0N00	KN482000	H guide front pulley bracket		
22	48Y5N00	KN483450	V guide rail (L=660)		
23	48J9H01	HH481991	Timing pulley shaft		
24	48L1H	HH482110	Timing pulley shaft bolt cap		
25	91179	A9011079	Needle bearing TA-1225		
26	48T8P00	HP482980	Pantograph driving pulley (Front) S5M		
27	91252	A9012052	E-ring φ10		
28			Flush screw M4×6		
29			Screw M3×6		
30			Hex. bolt M4×40		
31			Hex. socket bolt M3×6		
32			Hex. nut M5		
33			Button bolt		
34			Hex. socket set screw M5×8		
35			Hex. socket bolt M4×15		
36			Hex. socket bolt M8×20		
37			Hex. socket bolt M5×20		
38			Hex. socket bolt M4×18		
39			Hex. nut M8		
40			Hex. bolt M4×25		

(IA)7.50

⑭ Pantograph drive mechanism (H Direction) Ⅱ 320×450・320×350

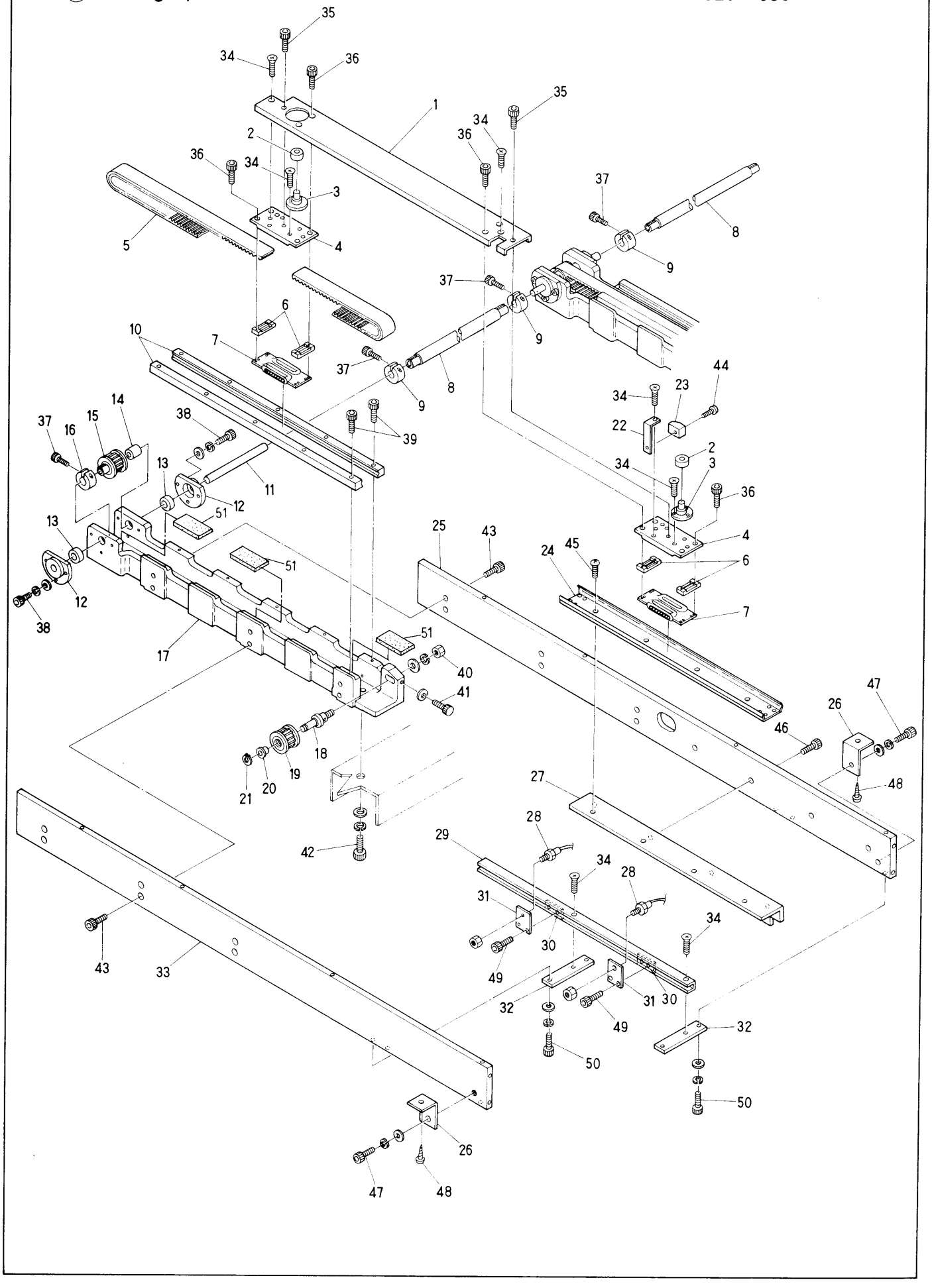

⑭ Pantograph drive mechanism (H Direction) Ⅱ 320×450・320×350

ITEM	PART No.	LIST No.	DESCRIPTION	Q'TY	REMARK
1	4824C	KC480240	H menber connectins channel HJ	1	
2	91006	A9010006	Bearing (625zz)(1650)	2	
3	4826C	KC480260	Bearing shaft	2	
4	4821C	KC480210	H slide pack base	2	
5	48A3H	HH481030	Timming belt T5-20-243	1	
6	4765C	KC470650	Timming belt rack	4	
7	4831H	HH480310	Slide pack (FBW3590)	2	
8			H pulse motor connecting shaft set		
9	4718H	HH470180	clamp (φ12)		
10	4833C	KC480330	V guide rail S55C (430L)	2	
11	4764C	KC470640	Timming belt shaft(150L)		
	4759C	KC470590	Timming belt shaft(130L)		
12	4769N00	KN470690	Bearomg husing	2	
13	91101	A9011001	Bearing (JBS 108)	2	
14	4762C	KC470620	Timming pulley adjust collar	1	
15	4752C	KC470520	Timming pulley (ML－3208－T5-16T)	1	
16	4719C	KC470190	Clamp (φ13)	1	
17	4879N00	KN480790	H guide rail base	1	
18	4827C	KC480270	Timming pulley shaft (Front)	1	
19	4754C	KC470540	Timming pulley	1	
20	4841H	HH480410	Timming pulley shaft bush	1	
21	91252	A9012052	E-Ring (φ10)	1	
22	4637U02	KU460372	H pantograph origin point magnet bracket	1	
23	95226	A9052026	Magnet M-102	1	
24	4833C	KC480330	V guide rail S55C (430L)	1	
25	48C3C	KC481230	H center guide cover R (JRC)	1	
26	1463C	KC140630	Table adjust plate	2	
27	48C4C	KC481240	H center guide rail base (JM-C)	1	
28	95224	A9052024	Switch RS-001	2	
29	4639U00	KU460390	H pantograph origin point rail(H center front)	1	
30	4627U00	KU460270	Plate nut (M3)	2	
31	4638U00	KU460380	RS-001 Bracket (H center front)	2	
32	48C8C01	KU481281	H center guide	2	
33	48D6C	KC481360	H center guide side cover (L)	1	
34			Screw M4×6		
35			Hex, socket bolt M4×8		
36			Hex, socket bolt M3×12		
37			Hex, socket bolt M5×15		
38			Hex, socket bolt M4×20		
39			Hex, socket bolt M4×15		
40			Hex, nut M8		
41			Hex, bolt M4×25		
42			Hex, socket bolt M8×20		
43			Hex, socket bolt M6×18		
44			Truss screw M3×6		

⑭ Pantograph drive mechanism (H Direction) Ⅱ 320×450・320×350

ITEM	PART No.	LIST No.	DESCRIPTION	Q'TY	REMARK
45			Truss screw M4×10		
46			Hex. socket bolt M4×10		
47			Hex. socket bolt M6×20		
48			Wood screw 5.1×25		
49			Hex. socket bolt M3×6		
50			Hex. socket bolt M4×15		

⑮ Pantograph drive mechanism (V Direction) Ⅲ 320×520

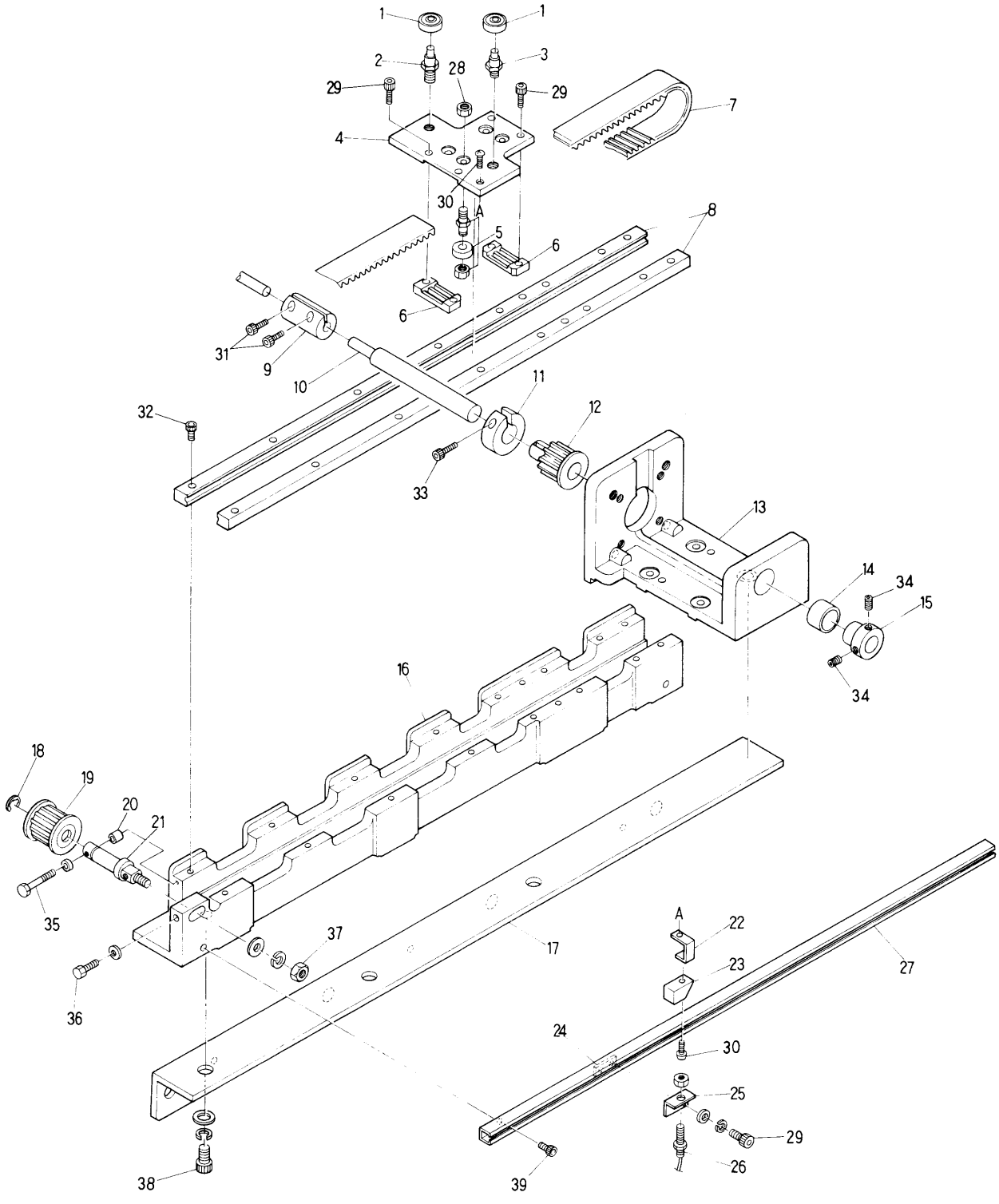

⑮ Pantograph drive mechanism (V Direction) Ⅲ

320×520

ITEM	PART No.	LIST No.	DESCRIPTION	Q'TY	REMARK
1	91006	A901006	Bearing (625zz)(1650)	2	
2	48V1P00	HP483110	Bearing pin B	1	
3	48S3P00	HP482830	Bearing pin	1	
4	48V8U00	KU483180	V roller base (5M-30)	1	
5	48T5P00	HP482180	Roller pin assy A	4	
6	48T4P00	HP482940	Timing belt rack (5M)	2	
7	92098	A9020098	Timing belt 300S5M2000	1	
8	48T1P00	HP482910	V guide rail (L=1060)	2	
9	48J3H01	HH481931	Pulse motor coupling (704,706)	1	
10	4918U00	KU490180	V timing belt shaft (AT704,706,708)	1	
11	48J8H	HH481980	Clamping φ19	1	
12	48T9P00	HP482990	Pantograph driving pulley (Rear) S5M	1	
13	4710U00	KU470100	V pulse motor bracket	1	
14	91163	A9011063	Needle bearing TLA 2016	1	
15	48J7H	HH481970	Pulse motor connecting shaft collar	1	
16	4813U00	KU480130	V guide rail base	1	
17	4740U00	KU470400	V guide rail base bracket (520)	1	
18	91252	A9012052	E-ring φ10	1	
19	48T8P00	HP482980	Pantograph driving pulley (Front) S5M	1	
20	48L1H	HH482110	Timing pulley shaft bolt cap	1	
21	48J9H01	HH481991	Timing pulley shaft	1	
22	4632U01	KU460321	V pantograph origin point magnet bracket	1	
23	95226	A9052026	Magnet (M-102)	1	
24	4627U00	KU460270	Plate nut M3	1	
25	4624T00	MT460240	RS-001 bracket (V)	2	
26	95224	A9052024	Switch RS-001	2	
27	4636U0K	KU460360	V pantograph origin point rail	1	
28			Hex. nut M5		
29			Hex. socket bolt M3×6		
30			Screw M3×6		
31			Hex. socket bolt M5×20		
32			Hex. socket bolt M4×15		
33			Hex. socket bolt M5×15		
34			Hex. socket set screw M5×8		
35			Hex. bolt M4×40		
36			Hex. bolt M4×25		
37			Hex. nut M8		
38			Hex. socket bolt M8×20		
39			Hex. socket bolt M4×6		

(IA)7.50

⑯ Control system Ⅰ (BEAT－708, 706, 704)

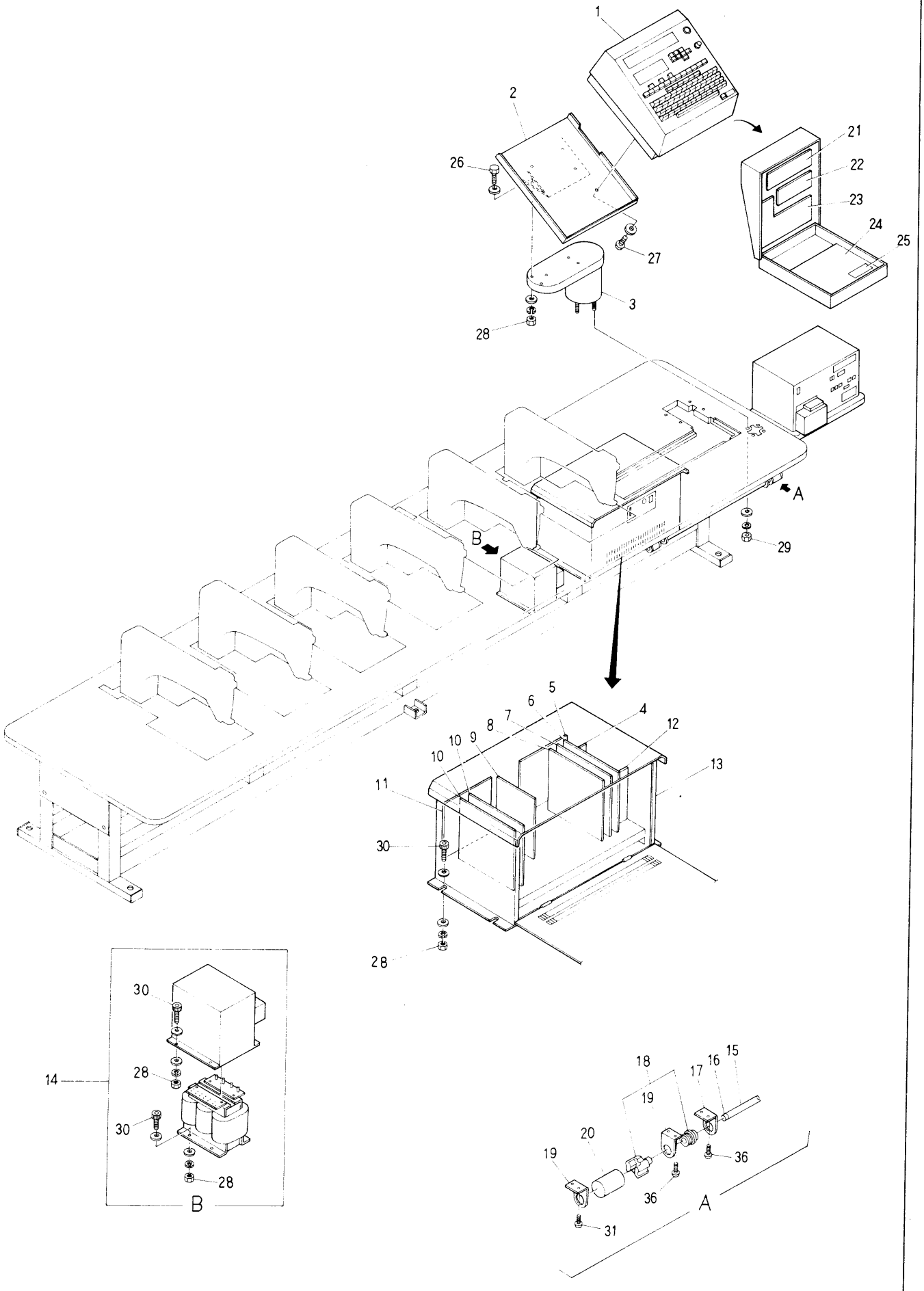

⑯ Control system I (BEAT-708, 706, 704)

ITEM	PART No.	LIST No.	DESCRIPTION	Q'TY	REMARK
1	51H3UAU	EAN016A1	SMT contoroler	1	
2	51C7T00	MT511270	SMT contoroler fixing base	1	
3	51C1U00	KU511210	Contoroler fixing pipe	1	
4	55T0030	EBN00590	SDU memory board (7020-2600)	1	
5	55T0020	EBN00580	SDU contorol mother board (7020-2300)	1	
6	55T0040	EBN00600	SDU memory mother board (7020-2500)	1	
7	55T0060	EBN00620	SDU contorol board (7020-2100)	1	
8	55T0070	EBN00630	SDU power board (7020-2200)	1	
9	55T0010	EBN00570	Power amp driver board (7020-2900)	1	
10	55T0080	EBN00640	Stepping motor driver (7020-2800)	1	
11	55T0000	EBN00560	SDU Driver mother board (7020-2700)	2	
12	55T0050	EBN00610	SDU System memory board (7020-2400)	1	
13	51H4UAU	EAN016A2	Driver SDU	1	
14	51J6UAU	EAN021A3	706 Transformer (1P)	1	
	51J7UAU	EAN022A3	706 Transformer (3P)	1	
	51J5UAU	EAN020A3	704 Transformer (1P)	1	
15	5316F	KF530160	Bar switch	1	
16	5317F	KF530170	Bar switch cap	2	
17	5319F	KF530190	Bar switch bracket (S)	2	
18	5311F	KF530110	Push botton switch MS320(Red)	1	
	5312F	KF530120	Push botton switch MS319(Green)	1	
19	5318F	KF530180	Bar switch bracket (L)	4	
20	5315F	KF530150	Push botton switch cap	2	
21	55T0110	EBN00670	STX indicater (7020-7600)	1	
22	55T0120	EBN00680	SMT indicater (7020-7500)	1	
23	55T0130	EBN00690	SMT keyboard (7020-7300)	1	
24	55T0140	EBN00700	SMT contorolboard (7020-7200)	1	
25	55T0150	EBN00710	SMT PSU-board (7020-7210)	1	
26			Hex. bolt M6×15		
27			Hex. bolt M4×15		
28			Hex. nut M6		
29			Hex. nut M8		
30			Hex. socket bolt M6×30		
31			Screw M4×25		

⑯ Control system Ⅱ（BEAT－M708,M706,M704）

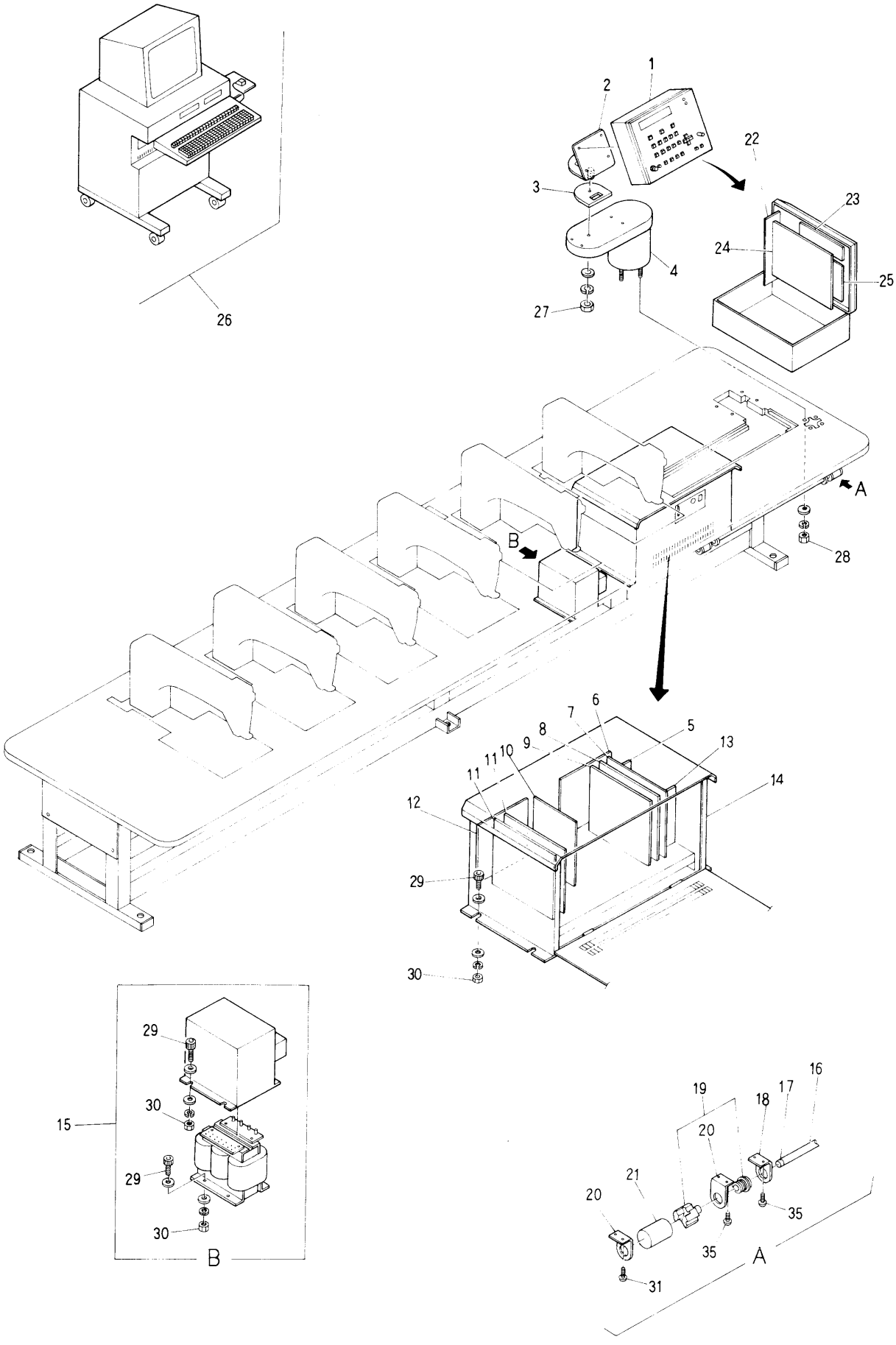

⑯ Control system Ⅱ (BEAT-M708, M706, M704)

ITEM	PART No.	LIST No.	DESCRIPTION	Q'TY	REMARK
1	51J9UAU	EAN017A0	SEAT, STX, SDU set	1	
2	51C2T00	MT511220	STX contoroler fixing base	1	
3	51C4T00	KU511240	STX contoroler fixing specer	1	
4	51C1U00	KU511210	Contoroler fixing pipe	1	
5	55T0030	EBN00590	SDU memory board (7020-2600)	1	
6	55T0020	EBN00580	SDU contorol mother board (7020-2300)	1	
7	55T0040	EBN00600	SDU memory mother board (7020-2500)	1	
8	55T0060	EBN00620	SDU contorol board (7020-2100)	1	
9	55T0070	EBN00630	SDU Power board (7020-2200)	1	
10	55T0010	EBN00570	Power amp driver board (7020-2900)	1	
11	55T0080	EBN00640	Stepping motor driver (7020-2800)	2	
12	55T0000	EBN00560	SDU Driver mother board (7020-2700)	1	
13	51T0050	EAN00610	SDU System memory board (7020-2400)	1	
14	51H4UAU	EAN016A2	Driver SDU	1	
15	51J6UAU	EAN021A3	706 Transformer (1P)	1	
	51J7UAU	EAN022A3	706 Transformer (3P)	1	
	51J5UAU	EAN020A3	704 Transformer (1P)	1	
16	5316F	KF530160	Bar switch	1	
17	5317F	KF530170	Bar switch cap	2	
18	5319F	KF530190	Bar switch bracket (S)	2	
19	5311F	KF530110	Push botton switch MS320 (Red)	1	
	5312F	KF530120	Push botton switch MS319 (Green)	1	
20	5318F	KF530180	Bar switch bracket (L)	4	
21	5315F	KF530150	Push botton switch cap	2	
22	55T0160	EBN00720	STX mother board (7020-1300)	1	
23	55T0120	EBN00680	SMT indicater (7020-7500)	1	
24	55T0170	EBN00730	STX contorol board (7020-1200)	1	
25	55T0180	EBN00740	STX keyboard (7020-1400)	1	
26	51K1UAU	EBN018A0	BEAT, M7000, STX, SDU set	1	
27			Hex. nut M10		
28			Hex. nut M8		
29			Hex. socket bolt M6×30		
30			Hex. nut M6		
31			Screw M4×25		

⑰ Thread cutting mechanism I

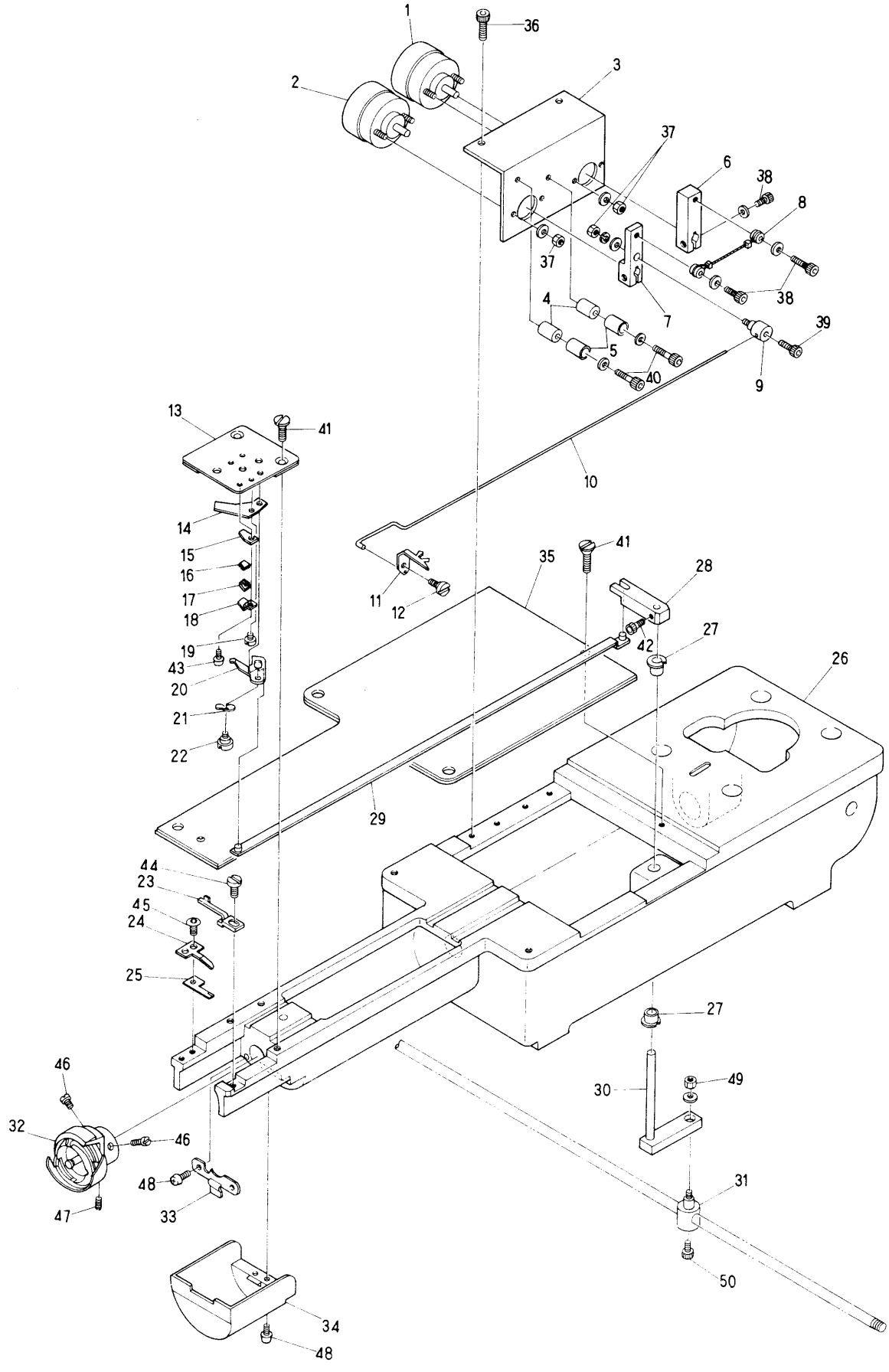

⑰ Thread cutting mechanism I

ITEM	PART No.	LIST No.	DESCRIPTION	Q'TY	REMARK
1	95612	A9056012	Rotary solenoid (3EL25X3.8.9)	1/H	
2	95608	A9056008	Rotary solenoid (3ER25X3.8.9)	1/H	
3	27J6C	KC271960	Solenoid stay	1/H	
4	27G5N01	KN271651	Stopper eccentric	2/H	
5	27G6N01	KN271661	Eccentric cover	2/H	
6	27J5C	KC271950	Solenoid lever B	1/H	
7	27J4C	KC271940	Solenoid lever A	1/H	
8	27J7C	KC271970	Drive rope	1/H	
9	27A4C01	KC271041	Conecting clamp	1/H	
10	27A3C01	KC271031	Hook drive rod	1/H	
11	27A2C01	KC271021	Hook	1/H	
12	27A0C	KC271000	Upper thread cutter turning shaft	1/H	
13	2794C	KC270940	Needle plate	1/H	
14	2796C	KC270960	Fixed cutter	1/H	
15	27C2C	KC271220	Lower thread support stay (Upper)	1/H	
16	27C1C01	KC271211	Magic tape (Upper)	1/H	
17	27C0C01	KC271201	Magic tape (Lower)	1/H	
18	27B9C01	KC271191	Lower thread support stay (Lower)	1/H	
19	2798C	KC270980	Fixed cutter set screw	1/H	
20	2795C	KC270950	Lower thread cutter	1/H	
21	91345	A9013045	Wave washer (WW5)	1/H	
22	2797C	KC270970	Lower thread cutter turret shaft	1/H	
23	2264C01	KC220641	Bobbin case fixing plate	1/H	
24	2719N00	KN271890	Cutter fixing plate	1/H	
25	27G0N00	KN271600	Upper thread cutter	1/H	
26	2128G02	KG210282	Bet	1/H	
27	912B4	A9012114	DU bush (MB0505-10FDU)	1/H	
28	27B2C	KC271120	Lower thread cutter drive lever (Upper)	1/H	
29	27A7C	KC271070	Lower thread cutter drive rod	1/H	
30	27B3C	KC271130	Lower thread cutter drive lever (Lower)	1/H	
31	2364F	TF230640	Lock connecting bar clamp	1/H	
32	2231F	TF220310	Bobbin case	1/H	
33	2548C01	KC250481	Bed cover fixing spring	1/H	
34	2547C01	KC250471	Bed cover	1/H	
35	2191G01	KG210911	Cxlinder bed cover	1/H	
36			Hex. socket bolt M4×8		
37			Hex. nut M3		
38			Hex. socket bolt M4×10		
39			Hex. socket bolt M3×5		
40			Hex. socket bolt M4×18		
41			Screw (SM11/64 40×8.5)		
42			Hex. socket bolt M4×8		
43			Pan screw M3×3		
44			Screw (SM11/64 40×7)		
45			Hex. socket botton bolt M3×6		

⑰ Thread cutting mechanism Ⅰ

ITEM	PART No.	LIST No.	DESCRIPTION	Q'TY	REMARK
46			Screw (SM11/64 40×4.5)		
47			Screw (SM11/64 40×4.5)		
48			Pan screw M3×5		
49			Hex. nut M4		
50			Hex. socket bolt M4×8		

⑱ Thread cutting mechanism Ⅱ

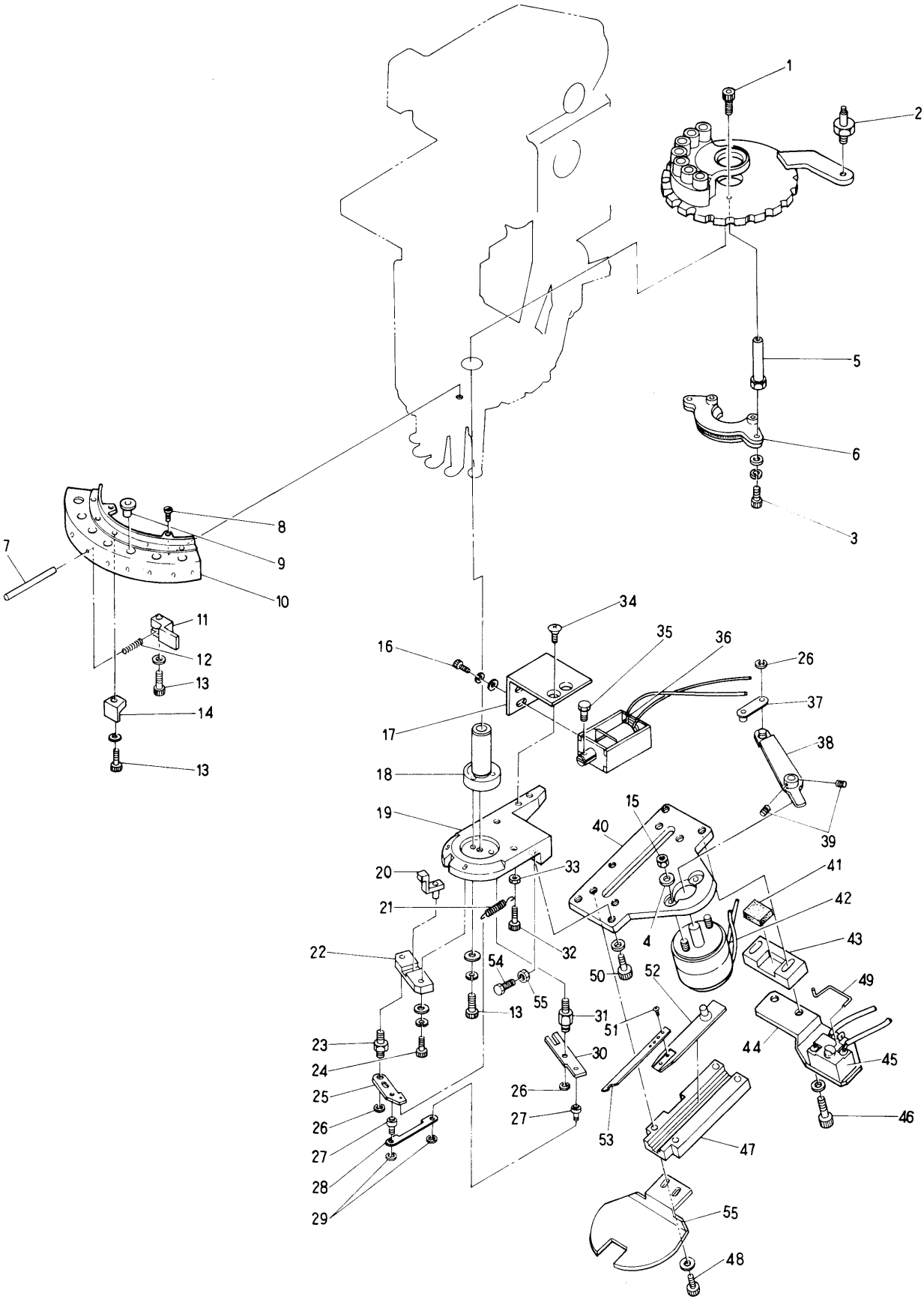

⑱ Thread cutting mechanism Ⅱ

ITEM	PART No.	LIST No.	DESCRIPTION	Q'TY	REMARK
1			Hex. socket bolt M3×15		
2	2720H	HH270200	Turret plate joint pin A	1	
3			Hex socket bolt M3×8		
4			Hex. nut M3		
5	2716N00	KN270160	Clamp support shaft	2	
6	2772C	KC270720	Thread support clamp CMP	1	
7	2731G	KG270310	Thread support shaft (7)	7	
8			Screw (SM9/64 40)		
9	2358F	KF230580	Take up lever ceramic	7	
10	2728C03	KC270283	Thread support apron (5)	1	
	2728G02	KG270282	Thread support apron (7)	1	
11	2730C01	KC270301	Thread support clamp	7	
12	2727C01	KC270271	Support spring	7	
13			Hex socket bolt M4×10		
14	2729C02	KC270292	Thread support blocke	7	
15			Hex nut M4		
16			Hex socket bolt M3×6		
17	2719C	KC270190	Solenoid stay	1	
18	2701C	KC270010	Drive shaft lower metal	1	
19	2722C02	KC270222	Fixing base	1	
20	2765C	KC270650	Thread support slider CMP	1	
21	2740C01	KC270401	Thread support lever spring	1	
22	2703C	KC270030	Slide base	1	
23	2705C	KC270050	Lever pin	1	
24			Hex socket bolt M3×10		
25	2706C	KC270060	Lever	1	
26	912C7	A9012127	E-ring 3	3	
27	2707C	KC270070	Rod pin	2	
28	2718C	KC270180	Plate rod	1	
29	91258	A9012058	E-ring φ2.5	2	
30	2717C01	KC270171	Scond lever	1	
31	2708C	KC270080	Scond lever pin	1	
32			Hex socket bolt M3×12		
33			Hex nut M3		
34			Flush screw M4×8		
35	2710C01	KC270101	Solenoid pin	1	
36	95613	A9056013	Keep solenoid TDS-K10SL (SP planger)	1	
37	2715N00	KN271850	Lever connecting plate	1	
38	2714N00	KN271840	Thread support lever	2	
39			Hex socket set screw M3×5		
40	2733C01	KC270331	Thread support base	1	
41	2737C	KC270370	Stopper rubber	1	
42	95607	A9056007	Rotary solenoid 4ER67.5-34×3×8×9	1	
43	2736C	KC270360	Stopper base	1	
44	2770C	KC27070C	Switch stay	1	

⑱ Thread cutting mechanism Ⅱ

ITEM	PART No.	LIST No.	DESCRIPTION	Q'TY	REMARK
45	95202	A9052002	Micro switch D2MC-01F (Thread cutter)	1	
46			Hex socket bolt M4×15		
47	2735C01	KC270351	Thread support foock guide	1	
48			Hex socket bolt M4×15		
49	27E8C	KC271480	Actutor lever	1	
50			Hex socket bolt M4×12		
51			Pan screw M2×5		
52	2734C01	KC270341	Thread support hoock fixing base	1	
53	2711C	KC270110	thread support hoock	1	
54	2778C	KC270780	Stopper screw	1	
55			Hex. nut M3	1	

⑲ Thread cutting dive mechanism Ⅲ

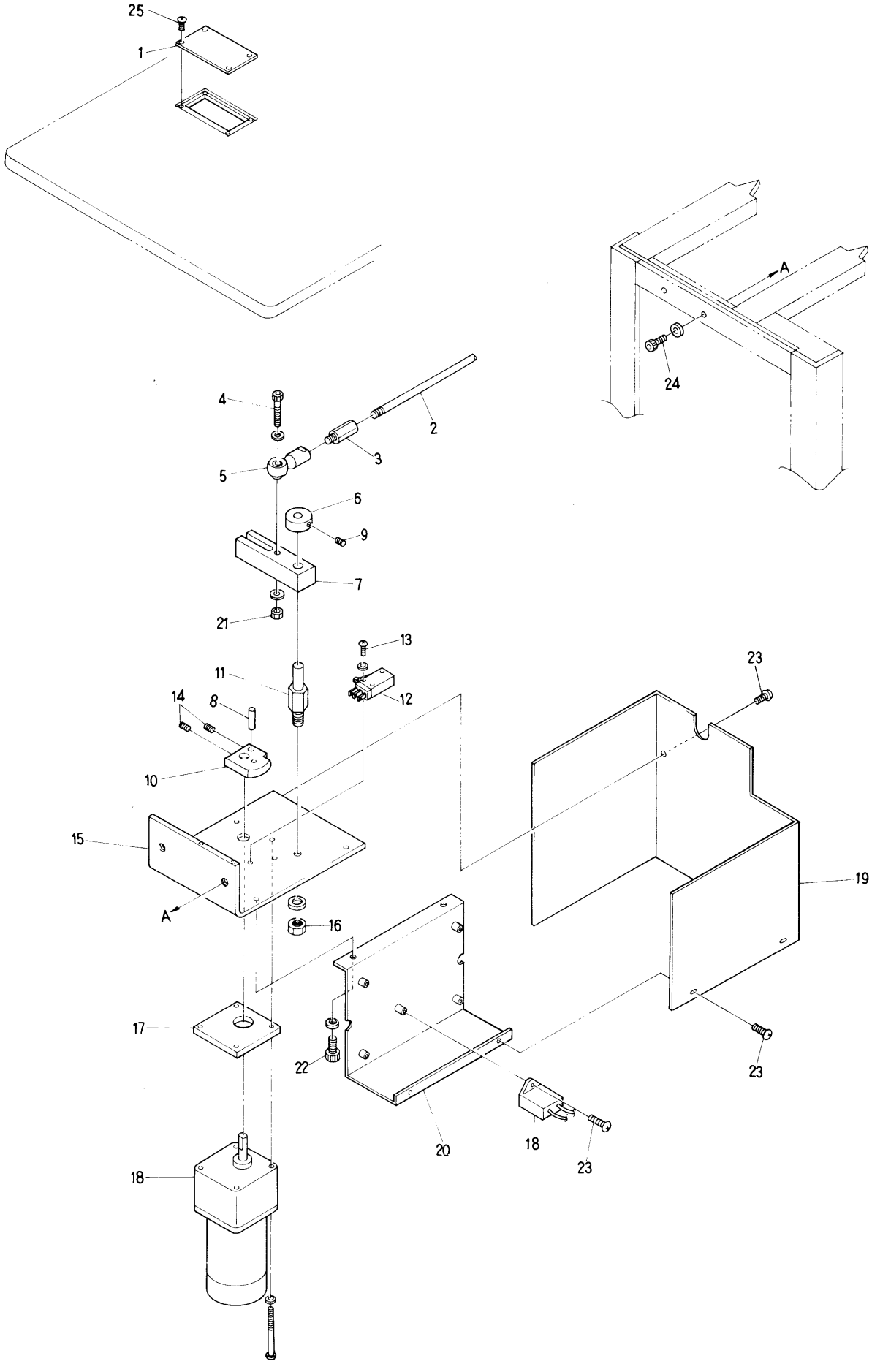

⑲ Thread cutting dive mechanism Ⅲ

ITEM	PART No.	LIST No.	DESCRIPTION	Q'TY	REMARK
1	27E4C	KC271440	Drive servece cover	1	
2	3341C	KC330410	Lock connecting rod		
3	3376H	HH330760	Hex. connecting bar	1	
4			Hex. socket bolt M6×20		
5	91202	A9012002	Uniball joint RB-6LS	1	
6	3318C	KC330180	Collar	1	
7	27B4C	KC271140	Motor lever	1	
8	27N5N00	KN272350	Drive pin	1	
9			Hex. socket set screw M5×6		
10	27B7C02	KC271172	Drive cam	1	
11	27B5C01	KC271151	Motor lever turret shaft	1	
12	95205	A9052005	Micro switch V-OIL 2255	1	
13			Screw M3×15 M3×20		
14			Hex. socket set screw M5×8		
15	27B6C02	KC271162	Motor bracket	1	
16			Hex. nut M8		
17	27E3C	KC271430	Motor specer	1	
18	96526	A9065026	Motor RM-H6A8PEAA(6RH-D36)	1	
19	27H1N01	KN271711	Motor bracket cover	1	
20	27E7C	KC271470	P.C.B fixing stay	1	
21			Hex. nut M6		
22			Hex. socket bolt M5×8		
23			Screw M3-6		
24			Hex. socket bolt M8×30		
25			Flush screw M4×6		

I N D E X

LIST No.	PART No.	PAGE No.	ITEM	LIST No.	PART No.	PAGE No.	ITEM
A90100001	91001	38	37	A9020098	92098	62	7
A90100006	91006	60	2	A9020098	92098	58	10
A90100006	91006	62	1	A9020106	920A6	50	6
A90100006	91006	58	3	A9052002	95202	70	45
A90100006	91006	58	3	A9052005	95205	72	12
A90100009	91009	34	21	A9052024	95224	60	28
A90100009	91009	36	21	A9052024	95224	62	26
A90100009	91009	44	14	A9052024	95224	58	19
A90110001	91101	60	13	A9052026	95226	60	23
A90110021	91121	34	23	A9052026	95226	62	23
A90110021	91121	36	23	A9052026	95226	58	2
A90110022	91122	34	26	A9056007	95607	70	42
A90110022	91122	36	26	A9056008	95608	68	2
A90110023	91123	34	22	A9056011	95611	38	24
A90110023	91123	36	22	A9056012	95612	68	1
A90110042	91142	50	2	A9056013	95613	70	36
A90110049	91149	38	5	A9065026	96526	72	18
A90110063	91163	62	14	EAN00610	51T0050	66	13
A90110063	91163	58	14	EAN016A1	51H3UAU	64	1
A90110079	91179	58	25	EAN016A2	51H4UAU	64	13
A90111112	911B2	30	7	EAN016A2	51H4UAU	66	14
A90111112	911B2	32	7	EAN017A0	51J9UAU	66	1
A90120001	91201	34	29	EAN020A3	51J5UAU	64	14
A90120001	91201	36	29	EAN020A3	51J5UAU	66	15
A90120001	91201	38	19	EAN021A3	51J6UAU	64	14
A90120002	91202	72	5	EAN021A3	51J6UAU	66	15
A90120002	91202	38	28	EAN022A3	51J7UAU	64	14
A90120003	91203	34	29	EAN022A3	51J7UAU	66	15
A90120003	91203	36	29	EBN00560	55T0000	64	11
A90120005	91205	34	29	EBN00560	55T0000	66	12
A90120005	91205	36	29	EBN00570	55T0010	64	9
A90120007	91207	26	6	EBN00570	55T0010	66	10
A90120007	91207	28	4	EBN00580	55T0020	64	5
A90120027	91227	26	14	EBN00580	55T0020	66	6
A90120052	91252	60	21	EBN00590	55T0030	64	4
A90120052	91252	62	18	EBN00590	55T0030	66	5
A90120052	91252	58	27	EBN00600	55T0040	64	6
A90120055	91255	38	38	EBN00600	55T0040	66	7
A90120058	91258	70	29	EBN00610	55T0050	64	12
A90121114	912B4	68	27	EBN00620	55T0060	64	7
A90121127	912C7	70	26	EBN00620	55T0060	66	8
A90121143	912E3	38	39	EBN00630	55T0070	64	8
A90121150	912F0	38	8	EBN00630	55T0070	66	9
A90122202	912K2	46	22	EBN00640	55T0080	64	10
A90130045	91345	68	21	EBN00640	55T0080	66	11

I N D E X

LIST No.	PART No.	PAGE No.	ITEM	LIST No.	PART No.	PAGE No.	ITEM
EBN00650	55T0090	40	6	HP231370	23D7P00	34	16
EBN00650	55T0090	42	6	HP231370	23D7P00	36	16
EBN00660	55T0100	38	3	HP240190	2419P00	44	8
EBN00670	55T0110	64	21	HP241110	24B1P00	40	2
EBN00680	55T0120	64	22	HP241120	24B2P00	42	2
EBN00680	55T0120	66	23	HP241130	24B3P00	44	2
EBN00690	55T0130	64	23	HP241140	24B4P00	44	2
EBN00700	55T0140	64	24	HP241150	24B5P00	40	11
EBN00710	55T0150	64	25	HP241150	24B5P00	42	11
EBN00720	55T0160	66	22	HP241160	24B6P00	40	3
EBN00730	55T0170	66	24	HP241160	24B6P00	42	3
EBN00740	55T0180	66	25	HP241170	24B7P00	40	9
EBN018A0	51K1UAU	66	26	HP241180	24B8P00	42	9
HG241020	24A2G	40	1	HP241190	24B9P00	40	7
HG241020	24A2G	42	1	HP241200	24C0P00	42	7
HH120900	1290H	46	18	HP241210	24C1P00	44	1
HH120920	1292H	46	16	HP241371	24D7P01	40	4
HH240360	2436H	40	20	HP241381	24D8P01	42	4
HH240360	2436H	42	20	HP241390	24D9P00	40	5
HH330281	3328H01	38	1	HP241390	24D9P00	42	5
HH330620	3362H	38	6	HP241400	24E0P00	40	13
HH330670	3367H	38	34	HP241400	24E0P00	42	13
HH330760	3376H	72	3	HP241410	24E1P00	40	12
HH330810	3381H	38	13	HP241410	24E1P00	42	12
HH470180	4718H	60	9	HP241450	24E5P00	40	8
HH480310	4831H	60	7	HP241460	24E6P00	42	8
HH480410	4841H	60	20	HP241470	24E7P00	40	10
HH481030	48A3H	60	5	HP241480	24E8P00	42	10
HH481931	48J3H01	52	11	HP250010	2501G	42	17
HH481931	48J3H01	56	8	HP250050	2505P00	40	17
HH481931	48J3H01	54	7	HP250581	2558P01	40	16
HH481931	48J3H01	62	9	HP250581	2558P01	42	16
HH481970	48J7H	62	15	HP250620	2562P00	40	14
HH481970	48J7H	58	12	HP250630	2563P00	42	14
HH481980	48J8H	62	11	HP331520	33F2P00	38	21
HH481980	48J8H	58	16	HP331531	33F3P01	38	25
HH481991	48J9H01	62	21	HP331550	33F5P00	38	22
HH481991	48J9H01	58	23	HP331560	33F6P00	38	33
HH482110	48L1H	62	20	HP331570	33F7P00	38	14
HH482110	48L1H	58	24	HP331580	33F8P00	38	16
HP231290	23C9P00	34	18	HP331590	33F9P00	38	17
HP231290	23C9P00	36	18	HP331660	33G6P00	38	20
HP231310	23D1P00	34	17	HP331690	33J6P00	38	10
HP231310	23D1P00	36	17	HP331940	33J4P00	38	9
HP231340	23D4P00	70	2	HP331940	33J4P00	38	23

I N D E X

LIST No.	PART No.	PAGE No.	ITEM	LIST No.	PART No.	PAGE No.	ITEM
HP331950	33J5P00	38	36	KC140530	1453C	18	13
HP482830	48S3P00	62	3	KC140530	1453C	10	13
HP482830	48S3P00	58	4	KC140530	1453C	20	11
HP482831	48S3P01	58	8	KC140540	1454C	22	11
HP482910	48T1P00	62	8	KC140540	1454C	16	10
HP482940	48T4P00	62	6	KC140540	1454C	24	11
HP482940	48T4P00	58	11	KC140540	1454C	18	10
HP482950	48T5P00	58	6	KC140540	1454C	12	10
HP482950	48T5P00	62	5	KC140540	1454C	10	10
HP482980	48T8P00	62	19	KC140540	1454C	20	10
HP482980	48T8P00	58	26	KC140550	1455C	22	14
HP482990	48T9P00	62	12	KC140550	1455C	16	12
HP482990	48T9P00	58	15	KC140550	1455C	24	14
HP483110	48V1P00	62	2	KC140550	1455C	18	12
HP710790	7179P00	46	5	KC140550	1455C	12	12
HQ741F30	740F3Q0	38	32	KC140550	1455C	10	12
KC110910	1191C	14	8	KC140550	1455C	20	12
KC110910	1191C	8	8	KC140560	1456C	22	12
KC110910	1191C	22	5	KC140560	1456C	16	11
KC110910	1191C	16	4	KC140560	1456C	24	12
KC110910	1191C	22	5	KC140560	1456C	18	11
KC110910	1191C	18	4	KC140560	1456C	12	11
KC110910	1191C	12	4	KC140560	1456C	10	11
KC110910	1191C	10	4	KC140630	1463C	60	26
KC110910	1191C	20	4	KC220210	2221C	26	5
KC110970	1197C	46	17	KC220641	2264C01	68	23
KC120841	1284C01	14	12	KC250471	2547C01	68	34
KC120841	1284C01	8	12	KC250471	2547C01	26	13
KC120841	1284C01	22	12	KC250481	2548C01	68	33
KC120841	1284C01	16	9	KC250481	2548C01	26	11
KC120841	1284C01	24	10	KC270010	2701C	70	18
KC120841	1284C01	18	9	KC270030	2703C	70	22
KC120841	1284C01	12	9	KC270050	2705C	70	23
KC120841	1284C01	10	9	KC270060	2706C	70	25
KC120841	1284C01	20	9	KC270070	2707C	70	27
KC120860	1286C	22	15	KC270080	2708C	70	31
KC120860	1286C	16	14	KC270101	2710C01	70	35
KC120860	1286C	22	15	KC270110	2711C	70	53
KC120860	1286C	18	14	KC270171	2717C01	70	30
KC120860	1286C	12	13	KC270180	2718C	70	28
KC120860	1286C	10	14	KC270190	2719C	70	17
KC120860	1286C	20	13	KC270222	2722C02	70	19
KC140530	1453C	22	13	KC270271	2727C01	70	12
KC140530	1453C	16	13	KC270283	2728C03	70	10
KC140530	1453C	24	13	KC270292	2729C02	70	14

I N D E X

LIST No.	PART No.	PAGE No.	ITEM	LIST No.	PART No.	PAGE No.	ITEM
KC270301	2730C01	70	11	KC470190	4719C	60	16
KC270331	2733C01	70	40	KC470520	4752C	60	15
KC270341	2734C01	70	52	KC470540	4754C	60	19
KC270351	2735C01	70	47	KC470590	4759C	60	11
KC270360	2736C	70	43	KC470620	4762C	60	14
KC270370	2737C	70	41	KC470640	4764C	60	11
KC270401	2740C01	70	21	KC470650	4765C	60	6
KC270650	2765C	70	20	KC480150	4815C	56	5
KC27070C	2770C	70	44	KC480210	4821C	60	4
KC270720	2772C	70	6	KC480240	4824C	60	1
KC270780	2778C	70	54	KC480260	4826C	60	3
KC270940	2794C	68	13	KC480270	4827C	60	18
KC270950	2795C	68	20	KC480330	4833C	60	10
KC270960	2796C	68	14	KC480330	4833C	60	24
KC270970	2797C	68	22	KC480350	4835C	52	3
KC270980	2798C	68	19	KC480350	4835C	56	3
KC271000	27A0C	68	12	KC480350	4835C	54	3
KC271021	27A2C01	68	11	KC481230	48C3C	60	25
KC271031	27A3C01	68	10	KC481240	48C4C	60	27
KC271041	27A4C01	68	9	KC481250	48C5C	56	5
KC271070	27A7C	68	29	KC481260	48C6C	56	6
KC271120	27B2C	68	28	KC481260	48C6C	54	5
KC271130	27B3C	68	30	KC481360	48D6C	60	33
KC271140	27B4C	72	7	KC510240	5124C	50	13
KC271151	27B5C01	72	11	KC320310520	3231C	48	11
KC271162	27B6C02	72	15	KC330310520	3331C	34	28
KC271172	27B7C02	72	10	KC330310520	3331C	36	28
KC271191	27B9C01	68	18	KF220110	2211F	28	6
KC271201	27C0C01	68	17	KF220120	2212F	28	9
KC271211	27C1C01	68	16	KF220130	2213F	28	10
KC271220	27C2C	68	15	KF220140	2214F	28	5
KC271430	27E3C	72	17	KF220150	2215F	28	11
KC271440	27E4C	72	1	KF220160	2216F	28	7
KC271470	27E7C	72	20	KF220180	2218F	28	8
KC271480	27E8C	70	49	KF220190	2219F	28	12
KC271940	27J4C	68	7	KF220220	2222F	26	3
KC271950	27J5C	68	6	KF220230	2223F	26	7
KC271960	27J6C	68	3	KF220230	2223F	28	17
KC271970	27J7C	68	8	KF220240	2224F	28	15
KC320590	3259C	48	1	KF220250	2225F	28	16
KC330170	3317C	38	2	KF220270	2227F	28	19
KC330180	3318C	72	6	KF220290	2229F	26	4
KC330410	3341C	72	2	KF220310	2231F	26	12
KC330410	3341C	32	4	KF220450	2245F	28	13
KC330510	3351C	38	27	KF220460	2246F	28	14

I N D E X

LIST No.	PART No.	PAGE No.	ITEM	LIST No.	PART No.	PAGE No.	ITEM
KF220470	2247F	28	18	KF230610	2361G	30	13
KF220480	2248F	26	2	KF230610	2361G	32	13
KF220550	2255F	26	10	KF230620	2362F	38	35
KF230010	2301F	34	1	KF230630	2363F	30	11
KF230010	2301F	36	1	KF230630	2363F	32	11
KF230020	2302F	34	3	KF230630	2363F	38	26
KF230120	2312F	34	20	KF230640	2364F	30	12
KF230120	2312F	36	20	KF230640	2364F	32	12
KF230180	2318F	34	2	KF230650	2365F	30	10
KF230180	2318F	36	2	KF230650	2365F	32	10
KF230210	2321F	34	4	KF230910	2391F	34	6
KF230210	2321F	36	4	KF230910	2391F	36	6
KF230230	2323F	34	8	KF230920	2392F	34	5
KF230230	2323F	36	8	KF230920	2392F	36	5
KF230240	2324F	34	9	KF230930	2393F	34	7
KF230240	2324F	36	9	KF230930	2393F	36	7
KF230250	2325F	34	10	KF240030	2403F	44	3
KF230250	2325F	36	10	KF240160	2416F	40	22
KF230310	2331F	34	12	KF240160	2416F	42	22
KF230310	2331F	36	12	KF240170	2417F	40	31
KF230320	2332F	34	11	KF240170	2417F	42	31
KF230320	2332F	36	11	KF240200	2420F00	44	9
KF230330	2333F	34	24	KF240280	2428F	40	28
KF230330	2333F	36	24	KF240280	2428F	42	28
KF230340	2334F	34	13	KF240420	2442F	44	17
KF230340	2334C	36	13	KF240440	23D3P00	44	10
KF230360	2336F	34	30	KF240450	2445F	44	11
KF230360	2336F	36	30	KF240460	2446F	44	16
KF230420	2342F	28	2	KF240470	2447F	44	15
KF230450	2345F	34	14	KF240480	2448F	44	13
KF230450	2345F	36	14	KF240490	2449F	44	12
KF230460	2346F	34	15	KF240520	2452F	44	7
KF230460	2346F	36	15	KF240530	2453F	44	4
KF230480	2348F	34	19	KF240550	2455F	44	6
KF230480	2348F	36	19	KF240560	2456F	44	5
KF230510	2351F	30	6	KF240610	2461F	44	18
KF230510	2351F	32	6	KF240700	2470F	40	24
KF230530	2368F00	30	3	KF240700	2470F	42	24
KF230530	2368F00	32	3	KF240710	2471F	40	19
KF230540	3341C	30	4	KF240710	2471F	42	19
KF230550	2355F	30	9	KF240740	2474F	40	29
KF230550	2355F	32	9	KF240740	2474F	42	29
KF230580	2358F	70	9	KF240750	2475F	40	30
KF230580	2358F	30	5	KF240750	2475F	42	30
KF230580	2358F	32	5	KF240760	2476F	40	27

I N D E X

LIST No.	PART No.	PAGE No.	ITEM	LIST No.	PART No.	PAGE No.	ITEM
KF240760	2476F	42	27	KG240220	2422G	40	23
KF240780	2478F	40	25	KG240220	2422G	42	23
KF240780	2478F	42	25	KG240251	2425G01	40	21
KF240900	2490F00	46	6	KG240251	2425G01	42	21
KF240910	2491F	40	26	KG241031	24A3G01	46	9
KF240910	2491F	42	26	KG270282	2728G02	70	10
KF240930	2493F	40	15	KG270310	2731G	70	7
KF240930	2493F	42	15	KG330150	3315G	38	18
KF250200	2520F	40	33	KG710161	7116G01	46	3
KF250200	2520F	42	33	KN230410	2341N00	28	1
KF310071	3107U01	50	9	KN230430	2343N00	28	3
KF320040	3204F	48	2	KN231660	23G6N01	34	25
KF320510	3251F	48	3	KN231670	23G7N01	36	25
KF320520	3252F	48	4	KN231690	23G9N00	34	31
KF320530	3253F	50	1	KN231700	23H0N00	36	31
KF320910	3291F	50	24	KN240820	2482N00	40	32
KF330381	3381F01	30	1	KN240820	2482N00	42	32
KF330381	3338F01	32	1	KN270160	2716N00	70	5
KF330381	3338F01	34	27	KN271600	27G0N00	68	25
KF330381	3338F01	36	27	KN271651	27G5N01	68	4
KF530110	5311F	64	18	KN271661	27G6N01	68	5
KF530110	5311F	66	19	KN271711	27H1N01	72	19
KF530120	5312F	64	18	KN271840	2714N00	70	38
KF530120	5312F	66	19	KN271850	2715N00	70	37
KF530150	5315F	64	20	KN271890	27I9N00	68	24
KF530150	5315F	66	21	KN272350	27N5N00	72	8
KF530160	5316F	64	15	KN470690	4769N00	60	12
KF530160	5316F	66	16	KN480400	4840N00	52	2
KF530170	5317F	64	16	KN480400	4840N00	54	2
KF530170	5317F	66	17	KN480420	4842N00	52	2
KF530180	5318F	64	19	KN480790	4879N00	60	17
KF530180	5318F	66	20	KN482000	48K0N00	58	21
KF530190	5319F	64	17	KN482010	48K1N00	58	13
KF530190	5319F	66	18	KN482870	48S7H00	58	5
KF540170	5417F	48	8	KN482880	48S8N00	58	7
KF540180	5418F	48	6	KN483400	48Y0N00	58	20
KF540350	5435F	48	9	KN483450	48Y5N00	58	22
KF710280	7128F	46	8	KN510570	5157N00	46	25
KF710300	7130F	46	1	KU120800	1280U00	14	9
KG120662	1266G02	14	2	KU120800	1280U00	8	9
KG120662	1266G02	8	2	KU120800	1280U00	22	7
KG120662	1266G02	20	2	KU120800	1280U00	16	6
KG210282	2128G02	68	26	KU120800	1280U00	24	7
KG210911	2191G01	68	35	KU120800	1280U00	18	6
KG230020	2302F	36	3	KU120800	1280U00	12	6

I N D E X

LIST No.	PART No.	PAGE No.	ITEM	LIST No.	PART No.	PAGE No.	ITEM
KU120800	1280U00	10	6	KU310160	3116U00	48	10
KU120800	1280U00	20	6	KU312720	31R2U00	50	7
KU121310	12D1U00	24	3	KU312730	31R3U00	50	5
KU121310	12D1U00	18	2	KU312740	31R4U00	50	4
KU121320	12D2U00	24	2	KU312750	31R5U00	50	3
KU121320	12D2U00	18	3	KU312771	31R7U01	48	5
KU121320	12D2U00	12	2	KU331710	33H1U00	38	30
KU140550	1455U00	14	11	KU331720	33H2U00	38	31
KU140550	1455U00	8	11	KU331730	33H3U00	38	29
KU140700	1470U00	14	7	KU331740	33H4U00	38	7
KU140700	1470U0U	8	7	KU331750	33H5U00	38	40
KU151601	15G0U01	8	1	KU331760	33H6U00	38	41
KU151611	15G1U01	14	1	KU331900	33J0U00	38	15
KU151631	15G3U01	18	1	KU331910	33J1U00	38	4
KU151642	15G4U02	20	1	KU331930	33J3U00	38	12
KU151651	15G5U01	22	1	KU460270	4627U00	60	30
KU151661	15G6U01	24	1	KU460270	4627U00	62	24
KU151671	15G7U01	10	1	KU460270	4627U00	58	17
KU151680	15G8U00	16	1	KU460321	4632U01	62	22
KU151690	15G9U00	12	1	KU460342	463U02	58	1
KU151700	15H0U00	8	6	KU460360	4636U0K	62	27
KU151710	15H1U00	14	6	KU460372	4637U02	60	22
KU151731	15H3U01	18	7	KU460380	4638U00	60	31
KU151741	15H4U01	20	7	KU460390	4639U00	60	29
KU151751	15H5U01	22	8	KU460461	4646U01	58	18
KU151761	15H6U01	24	8	KU470100	4710U00	62	13
KU151781	15H8U01	10	7	KU470110	4711U00	52	10
KU151790	15H9U00	16	7	KU470110	4711U00	56	10
KU151910	15J1U00	12	7	KU470110	4711U00	54	9
KU161601	16G0U01	8	5	KU470151	4715U01	52	9
KU161611	16G1U01	14	5	KU470151	4715U01	56	9
KU161631	16G3U01	18	8	KU470151	4715U01	54	8
KU161641	16G4U01	20	8	KU470400	4740U00	62	17
KU161651	16G5U01	22	9	KU480130	4813U00	62	16
KU161661	16G6U01	24	9	KU480160	4816U00	56	4
KU161671	16G7U01	10	8	KU481050	48A5U00	54	4
KU161680	16G8U00	16	8	KU481090	48A9V00	52	4
KU161690	16G9U00	12	8	KU481281	48C8C01	60	32
KU210800	2180U00	26	1	KU483180	48V8U00	62	4
KU210810	2181U00	26	1	KU483440	48Y4U00	58	9
KU210820	2182U00	26	1	KU490180	4918U00	62	10
KU210830	2183U00	26	1	KU490710	4971U00	52	13
KU310081	3108U01	50	9	KU490720	4972U00	52	13
KU310130	3113U00	50	10	KU510410	5141U00	40	18
KU310150	3115U00	50	8	KU510410	5141U00	42	18

I N D E X

LIST No.	PART No.	PAGE No.	ITEM	LIST No.	PART No.	PAGE No.	ITEM
KU511210	51C1U00	64	3				
KU511210	51C1U00	66	4				
KU511240	51C4T00	66	3				
KU540160	5416U00	48	7				
MA140380	1438A	14	3				
MA140380	1438A	8	3				
MA140530	1453A	14	12				
MA140530	1453A	8	14				
MA140540	1454A	14	13				
MA140540	1454A	8	13				
MA140570	1457A	14	14				
MA140570	1457A	8	12				
MA140580	1458A	14	15				
MA140580	1458A	8	15				
MA140690	1469A	14	4				
MA140690	1469A	8	4				
MA150491	1549A01	22	2				
MA150491	1549A01	16	2				
MA150491	1549A01	10	2				
MA220510	2251A	26	9				
MA250131	2513A01	26	8				
MA450520	4552A	52	1				
MA450660	4566A	56	1				
MA450760	4576A	54	1				
MA471020	47A2A	52	11				
MA481080	47A8A	54	10				
MT230490	2349T00	30	2				
MT230520	2352T00	30	8				
MT230520	2352T00	32	8				
MT230830	2383T00	32	2				
MT310130	3113T00	50	10				
MT314410	31DDT00	50	12				
MT314420	31DET00	50	11				
MT460240	4624T00	62	25				
MT460240	4624T00	58	18				
MT510210	5121T00	50	14				
MT510670	5167T00	46	21				
MT510680	5168T00	46	19				
MT510790	5179T00	46	20				
MT511220	51C2T00	66	2				
MT511270	51C7T00	64	2				
TF220310	2231F	68	32				
TF230640	2364F	68	31				